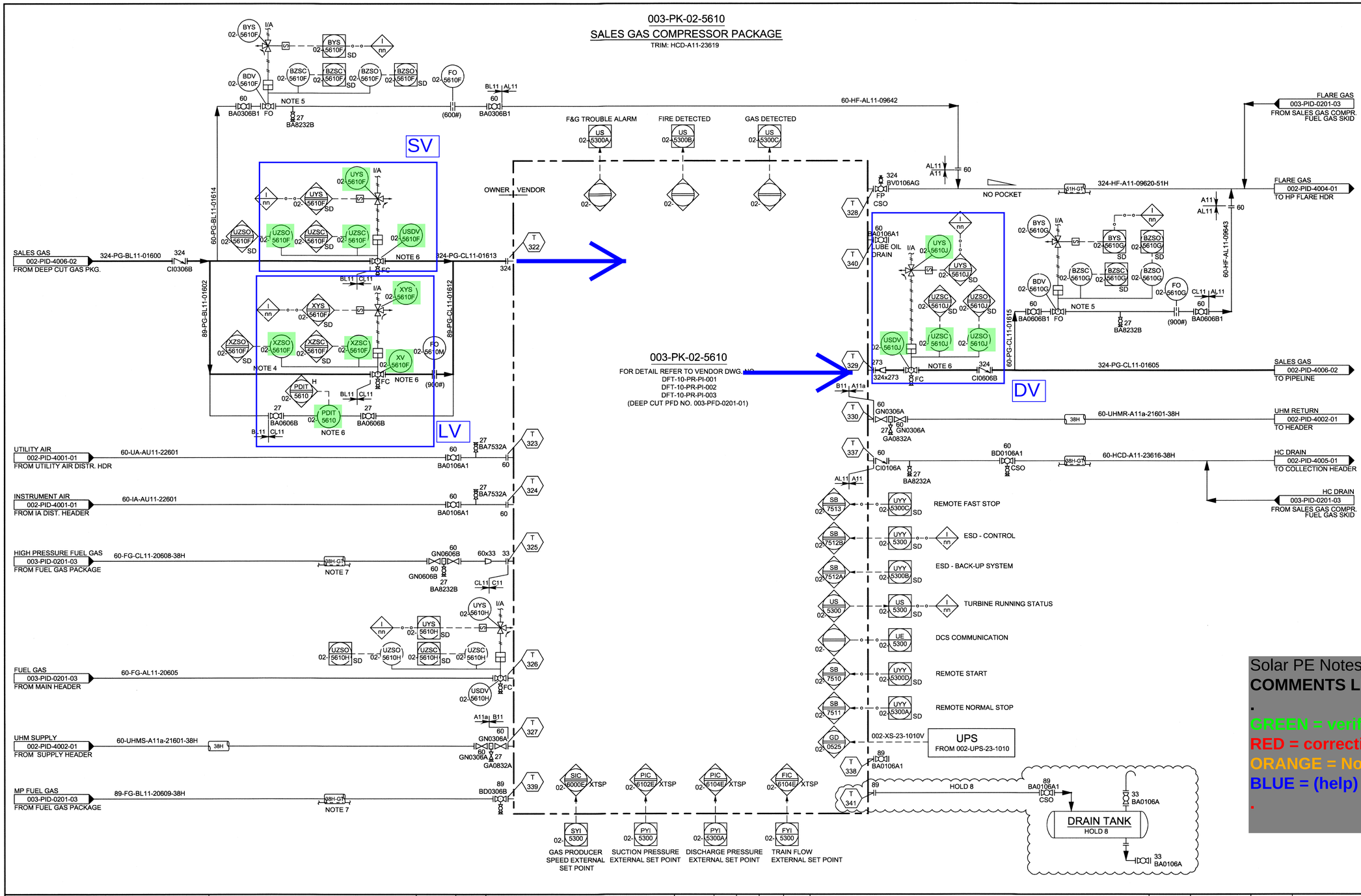

NOTES:

1. ALL INSTRUMENT TAG NUMBERS ON THIS SHEET SHALL FOLLOW ITS ASSOCIATED EQUIPMENT TAG NUMBERS, UNLESS OTHERWISE INDICATED (EX. PG-02-5000 ON EQUIPMENT 003-V-02-5000, FULL INSTRUMENT TAG NUMBER SHALL BE 003-PG-02-5000).
2. INTERCONNECTING LINES BETWEEN PACKAGES IN SAME PROCESS IDENTIFIER MODULE WILL BE IN VENDOR'S SCOPE.
3. "UHM" REFERS TO "UTILITY HEAT MEDIUM".
4. START-UP PRESSURIZATION BYPASS.
5. MIN. PIPE LENGTH=600 mm BETWEEN "BDV" AND "FO".
6. CONTROLLED BY SALES GAS COMPRESSOR LOCAL CONTROL PANEL (SOLAR TURBINES)
   003-USDV-02-5610F --- SDV-7621
   003-UZSO-02-5610F --- ZSO-7621
   003-UZSC-02-5610F --- ZSC-7621
   003-UYS-02-5610F --- SV-7621
   003-XV-02-5610F --- SDV-7611
   003-XZSO-02-5610F --- ZSO-7611
   003-XZSC-02-5610F --- ZSC-7611
   003-XYS-02-5610F --- SV-7611
   003-PDIT-02-5610 --- PDI-7611
   003-USDV-02-5610J --- SDV-7641
   003-UZSO-02-5610J --- ZSO-7641
   003-UZSC-02-5610J --- ZSC-7641
   003-UYS-02-5610J --- SV-7641
7. MINIMUM 35°C HOLD UP TEMPERATURE.
8. F&G INTERFACE SIGNALS COME FROM TURBINE BOX (JB70) SUPPLIED BY SOLAR TURBINES.

HOLDS:

1. DELETED.
2. DELETED.
3. DELETED.
4. DELETED.
5. DELETED.
6. DELETED.
7. DELETED.
8. LOCATION AND DETAILS.

Solar PE Notes
COMMENTS LEGEND
.
GREEN = verified device on Solar BOP
RED = correction/Q for WP
ORANGE = Not found in Solar BOP
BLUE = (help) notes
.

111

WP REF. NO. 003-PID-0201-01

DWG. NO.	REFERENCE DRAWINGS	DEVON PROJECT	REV	REVISIONS	DATE (yy.mm.dd)	BY	CHK'D	APP'D	OWNR APP'D
		01-00348.1	0	ISSUED FOR CONSTRUCTION	13.11.28	LL	JM	FT	

ENGINEER AND PERMIT STAMPS

PROFESSIONAL ENGINEER FRANK O. TAIWO ALBERTA NOV 28 2013

PERMIT TO PRACTICE
WorleyParsons Canada Services Ltd.
Signature
Date Nov 27, 2013
PERMIT NUMBER: P 0725
The Association of Professional Engineers, Geologists and Geophysicists of Alberta

CADD FILE:

DESIGNED	HA	12.11.24
DRAWN	RS	12.11.24
CHECKED	ERS	12.11.24
PROCESS CK.	AO	13.10.31
MECH. CK.		
PIPING CK.	CP	13.11.28
ELECT. CK.		
OWNER APP.		
OWNER APP.		

devon
DEVON FERRIER
DEEP CUT
P&ID – SALES GAS COMPRESSOR
LSD 11-2-39-8 W5M

CONTR JOB NO	SCALE	DWG. NO.	DEVON PROJ.	
14-00120	NTS	FER-003.1102039085-A-PID-0201-01	01-00348.1	0

WorleyParsons resources & energy

"This drawing is prepared solely for the use of the contractual customer of WorleyParsons Canada Services Ltd. and WorleyParsons Canada Services Ltd. assumes no liability to any other party for any representation contained in this drawing."

BDR_D VERSION: 2012-1

Drawing filename: T:\DEVON\407014-00\20111_DRAWINGS\06_PIDPID_03-DEEP CUT_WORKING DPC PID\FER-003.1102039085-A-PID-0201-01.DWG Plot date/time: Thursday - November 28, 2013 - 8:54am USER: ilyJin