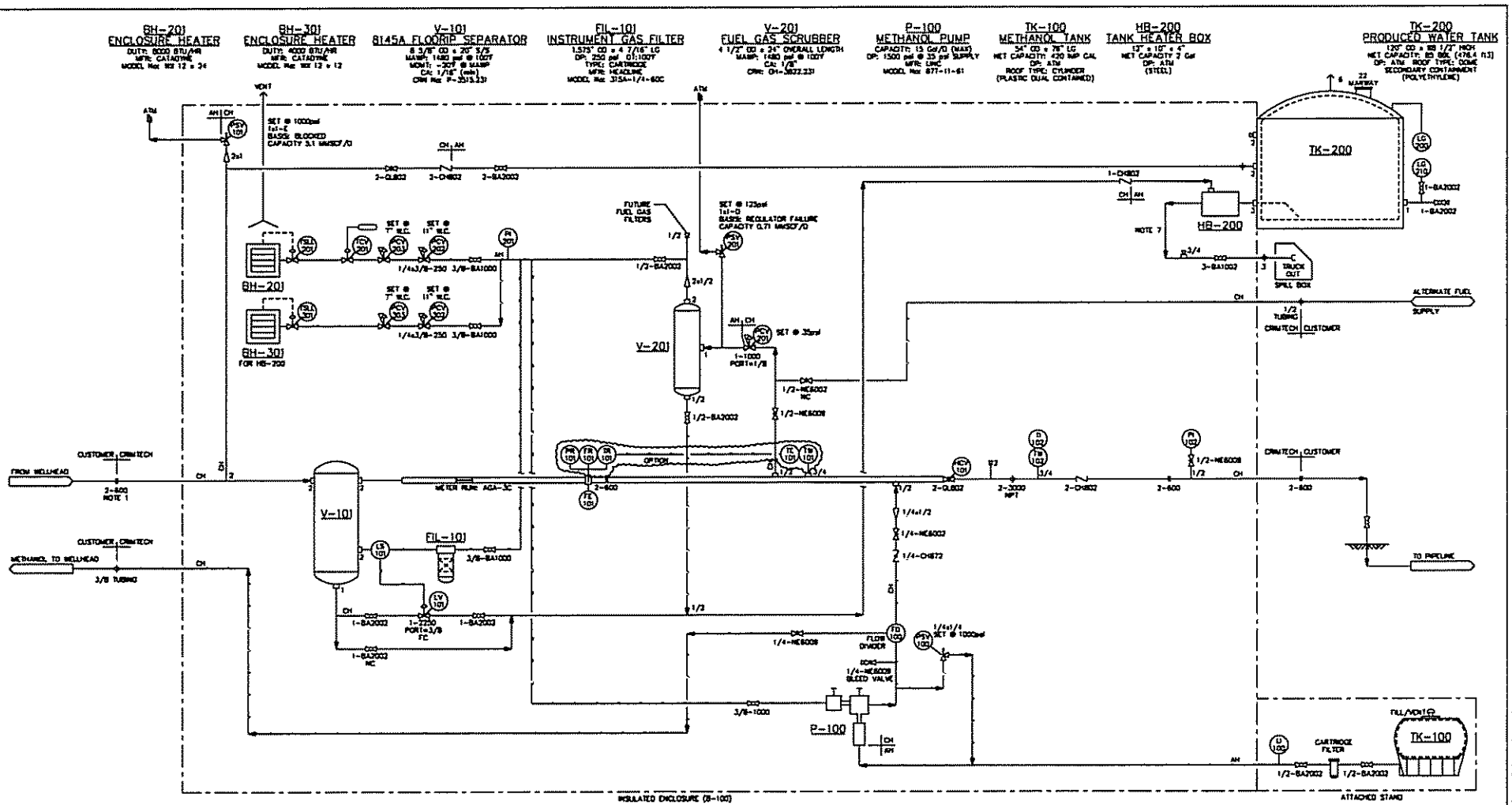

NO.	DATE	REVISION DESCRIPTION	BY	CHECKED
0	05 08 08	ISSUED FOR CONSTRUCTION WITH OPTION	JHK	

REVIEW STAGE	APPD.	DATE
PROCESS		-
MECHANICAL		-
STRUCTURAL		-
INSTRUMENT		-
ELECTRICAL		-
SHOP		-
G.C.		-
ESTIMATOR		-

NOTES:

1. MAXIMUM INLET PRESSURE 1000 PSIG.
2. ALL INSTRUMENTS ARE VENTED OUTSIDE (LEFT SIDE OF BUILDING).
3. UNIT BUILT TO MEET HUSKY ENERGY PRODUCTION DIVISION SPECIFICATIONS CH ISSUE 05/03 EXCEPTIONS: 2" THREADED PIPING
4. PACKAGES ARE SCADA READY.
5. SET PRESSURES EXCLUDING PSV'S TO BE FIELD SET.
6. MAXIMUM PACKAGE CAPACITY IS 5.1 MMSCF/D @ 1000 PSIG.
7. DRAIN LINE, NON PRESSURE LINE.

CRIMTECH
PH. 1-800-093-9958 www.crimtech.com

PATENT AND COPYRIGHT NOTICE

THIS DRAWING HAS NOT BEEN PUBLISHED AND IS THE SOLE PROPERTY OF CRIMTECH SERVICES LTD. AND IS LENT TO THE BORROWER FOR SHOW CONFIDENTIAL USE ONLY. NO PART OF THIS DRAWING MAY BE REPRODUCED OR TRANSMITTED IN ANY FORM OR BY ANY MEANS, ELECTRONIC OR MECHANICAL, FOR ANY PURPOSE, WITHOUT THE EXPRESS WRITTEN PERMISSION OF CRIMTECH SERVICES LTD. THE FLODRIP WELLHEAD SEPARATOR AND FLODRIP WELLHEAD SEPARATOR SYSTEM ARE PROTECTED BY CANADIAN PATENT 2,336,452 AND US PATENT 5,972,061.

FLODRIP® WELLHEAD SEPARATORS

PlasTank™

TITLE: SWEET GAS SEPARATOR PACKAGE
MODEL NO. 8145BTP-150Z
PIPING AND INSTRUMENTATION DIAGRAM

CUS USER	HUSKY ENERGY	CLIENT NUMBER	4500142939
CUSTOMER	HUSKY ENERGY	ORIGINAL DESIGN NUMBER	1010693
LOC	TBD	CRIMTECH DRAWING NUMBER	MF-4504765-01

SCALE: NTS
REV: 0

THIS DRAWING IS THE PROPERTY OF CRIMTECH SERVICES LTD. AND IS NOT TO BE COPIED, REPRODUCED OR DISTRIBUTED WITHOUT THE PRIOR WRITTEN CONSENT OF CRIMTECH SERVICES LTD.

...\MF-4504765-01.dwg 1/25/2006 8:01:19 AM