SIN-1306-PID-PR-000001

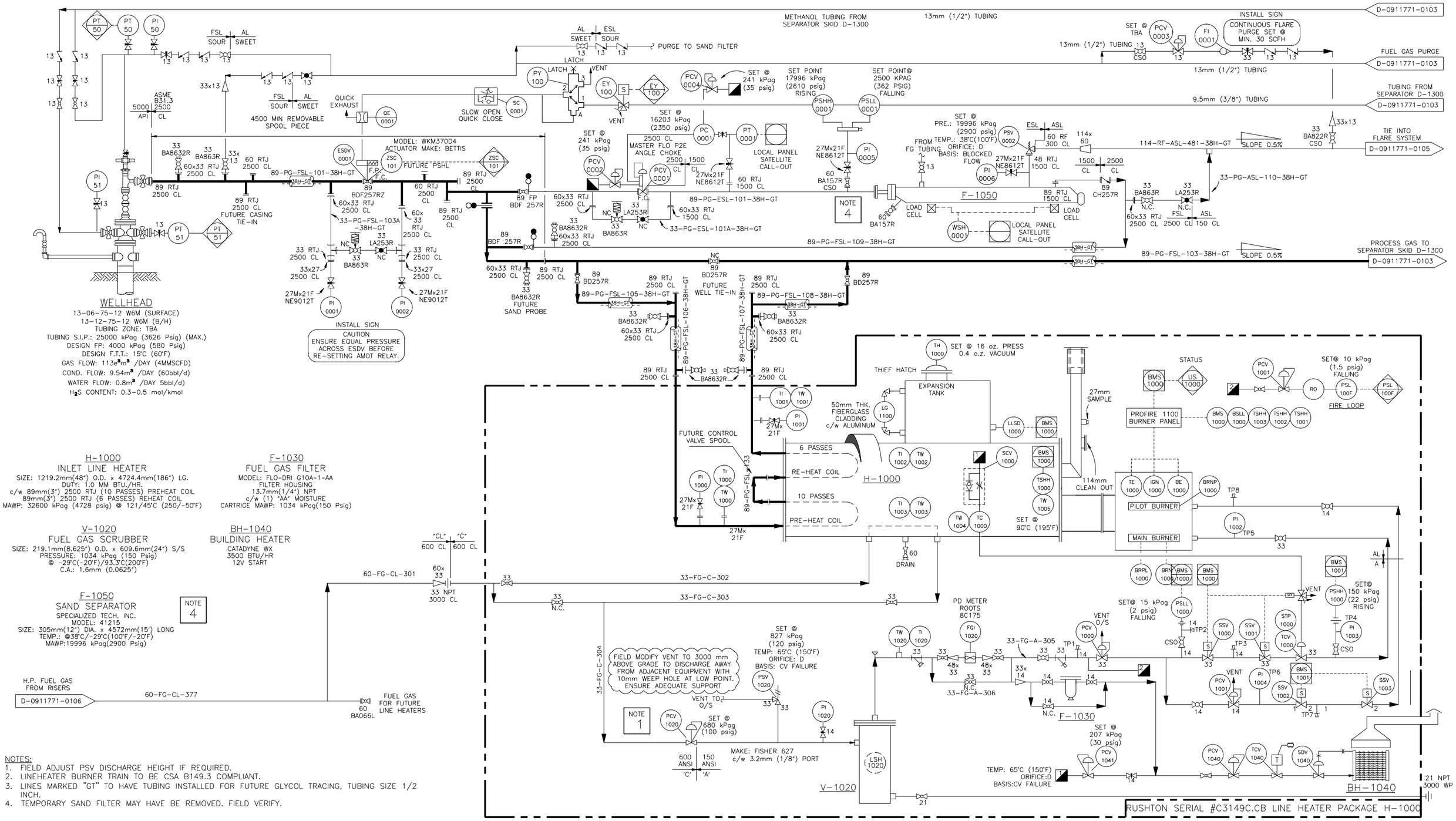

NOTES:
1. FIELD ADJUST PSV DISCHARGE HEIGHT IF REQUIRED.
2. LINEHEATER BURNER TRAIN TO BE CSA B149.3 COMPLIANT.
3. LINES MARKED "GT" TO HAVE TUBING INSTALLED FOR FUTURE GLYCOL TRACING, TUBING SIZE 1/2 INCH.
4. TEMPORARY SAND FILTER MAY HAVE BE REMOVED. FIELD VERIFY.

Uncontrolled When Printed

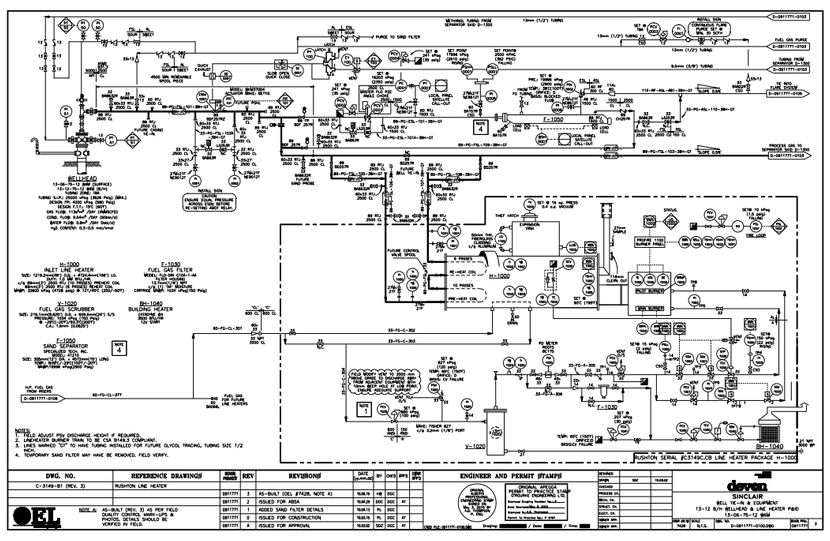

Uncontrolled When Printed