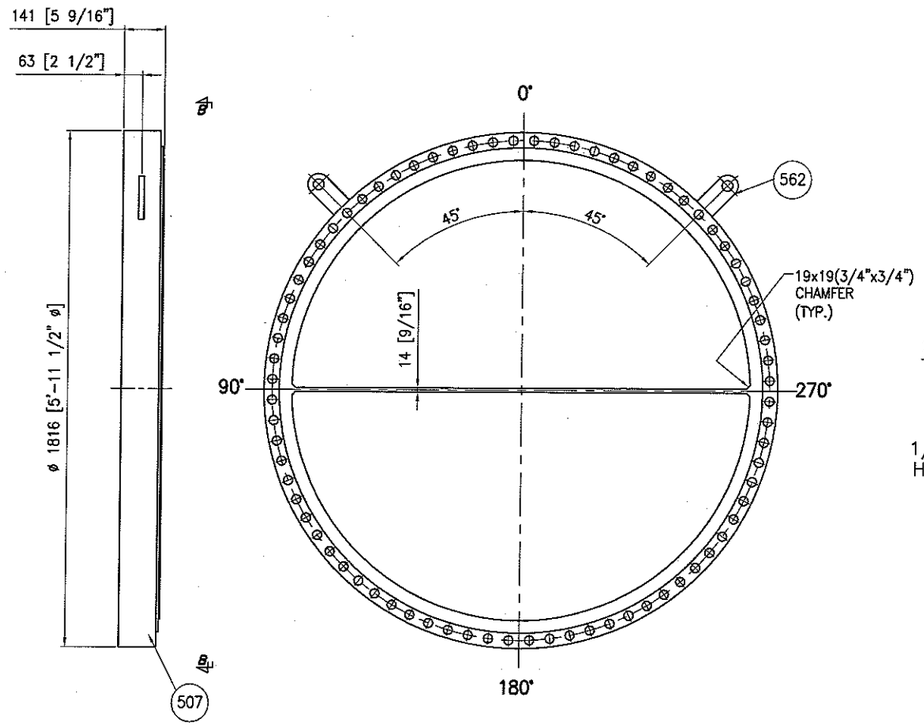

VIEW 'B-B'

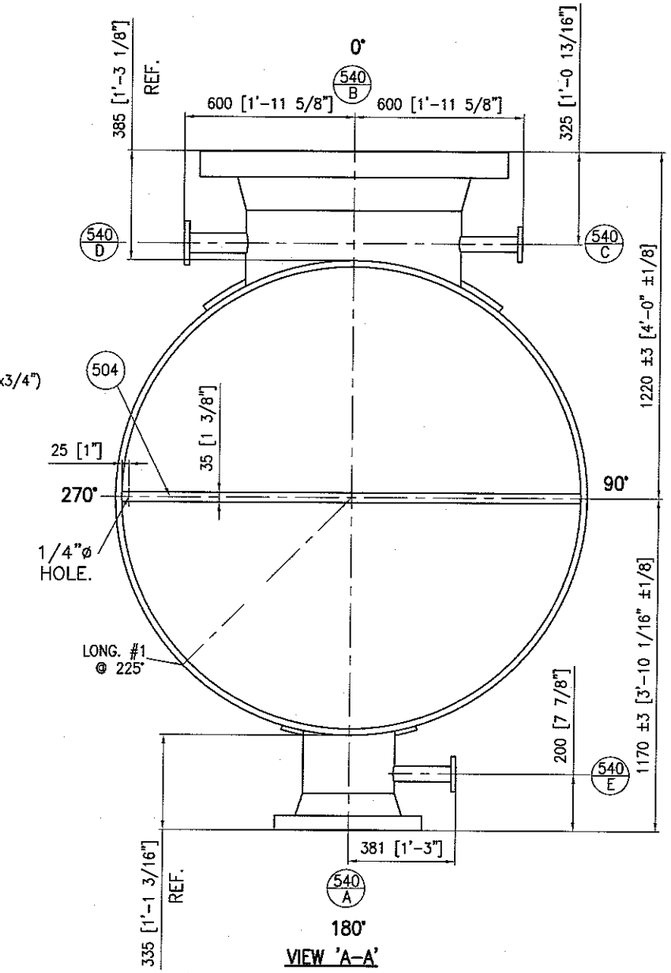

VIEW 'A-A'

(ITEMS 505, 506 OMITTED FOR CLARITY)

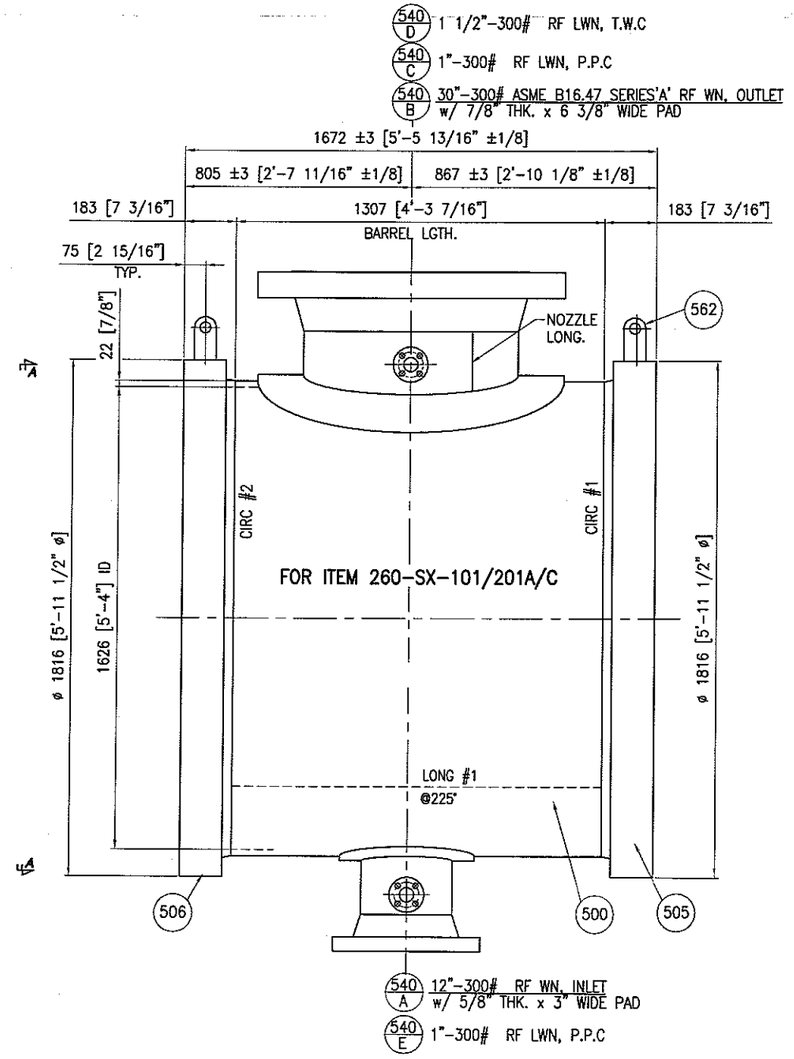

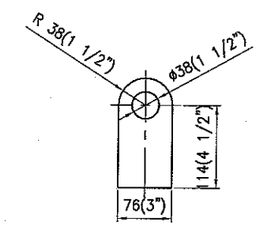

LIFTING LUG DETAIL

562 19(3/4") THK.

NOTES

1). ALL WELDING TO BE IN ACCORDANCE W/ PROCEDURES M-1-A, MEA-30-1, M-94.

2). FOR WELD AND BEVEL DETAILS SEE DWG T10176-11.

3). FLANGE DETAIL SEE DWG: T10176-7.

4). ALL BOLT HOLES TO STRADDLE NATURAL CENTRE LINES.

5). P.P.PLATE GROOVE ON CHANNEL COVER IS 14 $^{+1.6}_{-0}$ (9/16" $^{+1/16}_{-0}$) WIDE x 5 $^{+0.0}_{-0.8}$ (3/16" $^{+0.0}_{-1/32}$)DEEP.

6). TAPER P.P.PLATE TO 13 (1/2") x 32(1 1/4") LG AT GASKET FACE.

7). ALL DIMENSION ±1.6(1/16"), UNLESS OTHERWISE INDICATED.

REV	DATE	BY	REVISION DESCRIPTION
0	09.05.19	C.H	FOR REVIEW AND APPROVAL

KOCH HEAT TRANSFER CANADA LP
SARNIA TORONTO ONTARIO
A Koch Chemical Technology Group, LLC Company
ALLOY

FOR: SHELL ALBIAN SANDS, FORT McMURRAY ALBERTA	TITLE: SRU FEED STEAM HEATER
DRAWN: C.H DATE 09.05.19	SERIAL No.: T10176A/C/E/G
CHK'D: DATE	PO No.: 50274775 002 OP
APPR'D: DATE	ITEM No.: 260-SX-101/201 A/C
SCALE: NONE	No. OF UNIT : FOUR
KHTC DRAWING : CHANNEL DETAILS	KHTC DRAWING No.: T10176-4A — REV 0