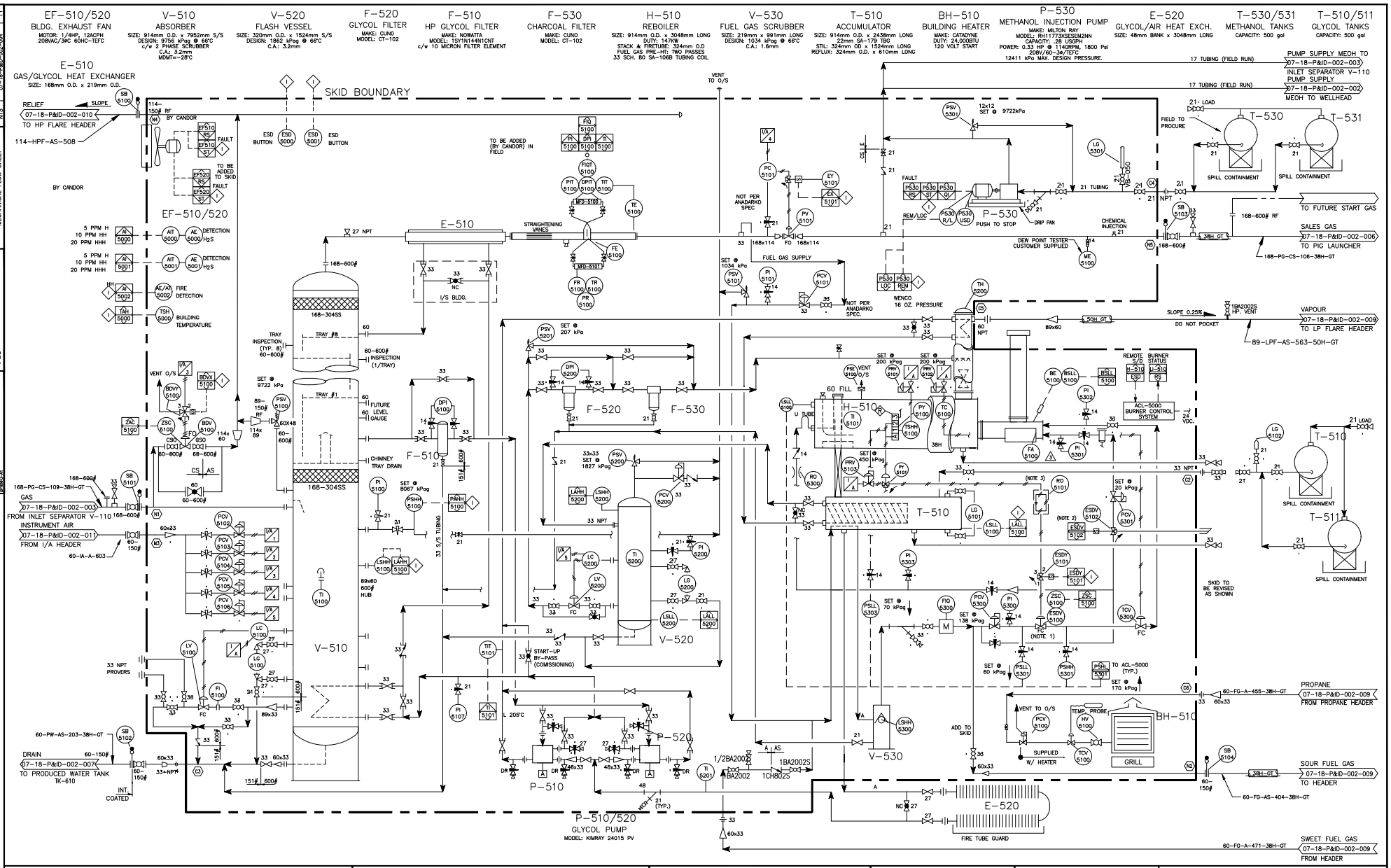

REVISIONS					
NO.	DESCRIPTION	BY	DATE	CHKD	APP'D
13	AS-BUILT - DPH JOB #8740	TSW	06.10.25		
12	ISSUED FOR CONSTRUCTION - DPH #8740	CAS	06-06-13		
11	AS-BUILT - DPH #7435	DG	06-04-28		
10	RE-ISSUED FOR CONSTRUCTION - DPH #7435	SK	05-09-23		
9	ISSUED FOR CONSTRUCTION - DPH #7435	CL	05-08-22	DC	SK
8	ISSUED FOR APPROVAL	MM	05-06-30		
7	AS-BUILT - JANUARY 2005	ML	05-01-28	GRA	
6	REVISED AS NOTED	GDA	04-01-29	GDK	MB

NOTES:
1. ESDV-5100 IS TO BE CERTIFIED TO CGA STANDARD 6.5/ANSI Z21.21. ESDV-5100 SHALL BE EQUIPPED WITH A PROOF OF CLOSURE SWITCH.
2. ESDV-5102 IS TO BE CERTIFIED TO CGA STANDARD 6.5/ANSI Z21.21.
3. SPEED CONTROL (RO-5101) VALVE SHALL BE ADJUSTED SO THAT ESDV-5100 WILL OPEN WHEN ENERGIZED IN GREATER THAN 5 SECONDS & CLOSE WHEN DE-ENERGIZED IN LESS THAN 2 SECONDS.

ENGINEERING STAMP AND PERMIT

PROFESSIONAL STAMP APPLIES TO REV. ONLY

DPH ENGINEERING INC.

Anadarko Canada Corporation

BUCKINGHORSE d-44A COMPRESSOR ADDITION
LOC. d-44-A, 94-G-10
SOUR GLYCOL DEHYDRATION
MECHANICAL FLOW SHEET

SCALE	DRAWN BY	DATE	CHECKED	APPROVED
NOEN	LW	03-11-12	CDK	

DWG 07-18-P&ID-002-004 REV 13

March 28, 2007 9:42:15 a.m.
Drawing: C:\ART\ANADARKO\8740\P&ID\07-18-P&ID-002-004.DWG TAB NAME: MODEL
Xrefs: