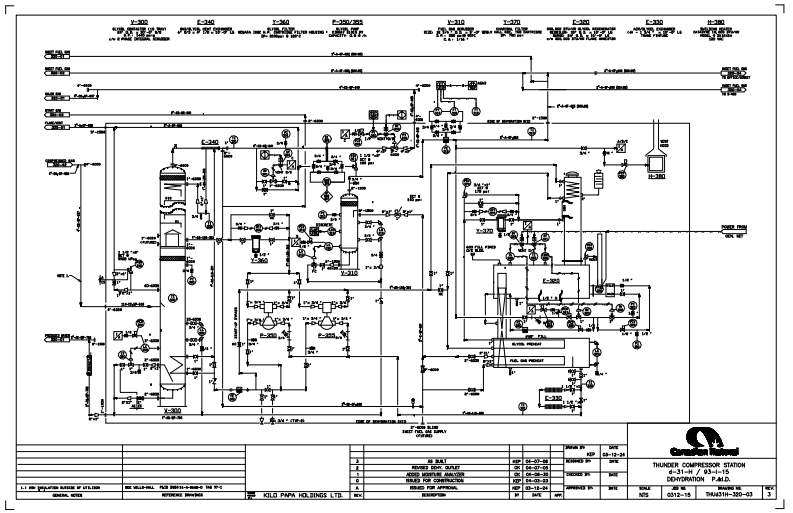

				3	AS BUILT	KEP	04-07-08	DRAWN BY KEP	DATE 03-12-24	THUNDER COMPRESSOR STATION d-31-H / 93-I-15 DEHYDRATION P.&I.D.	
				2	REVISED EDH1 OUTLET	CK	04-07-03	REVIEWED BY	DATE		
				1	ADDED MONITORS ANALYZER	CK	04-06-30	CHECKED BY	DATE		
				0	ISSUED FOR CONSTRUCTION	KEP	04-03-03				
				A	ISSUED FOR APPROVAL	KEP	03-12-24	APPROVED BY	DATE		
GENERAL NOTES		REFERENCE DRAWINGS	KILO PAPA HOLDINGS LTD.	REV	DESCRIPTION	BY	DATE	APP.		SCALE NTS	JOB NO. 0312-15	DRAWING NO. THM431H-320-03	REV. 3