V8-2775
REFLUX ACCUMULATOR
324MM OD X 1524MM S/S, 3MM CA
517 KPA MOP @ -28/149 DEG C
VERTICAL 2-PHASE

E10-2774-1/2
REFLUX PUMPS
UNION 38MM X 50MM X 178MM VCM
W/ 3/80/480V EX. PROOF
CAPACITY: 2.3M3/HR @ 34.5M HEAD
TDH: 310 SS

G8-2772/G8-2773
AMINE COOLER/REFLUX CONDENSER
ACE MODEL E838 W/ 16 KW 3/80/480V EX. PROOF
G8-2772: 1034 KPA MOP @ -28/178 DEG C, 1.5MM CA
DUTY: 144 KW + 20% SPARE
G8-2773: 1034 KPA MOP @ -28/178 DEG C, 3MM CA
DUTY: 360 KW + 20% SPARE
C/W HUDSON NORTHERN FAN

V8-2030/V8-2040
ACID GAS FLARE K.O./BLOWCASE
324MM OD X 1829MM S/S, 3MM CA
324MM OD X 810MM S/S, 3MM CA
517 KPA MOP @ -28/149 DEG C

V10-2772
AMINE STRIPPER
609MM OD X 13584MM S/S, 3MM CA
517 KPA MOP @ -28/149 DEG C
W/ 20 CARTRIDGE TYPE TRAYS
VALVE TRAYS BY GLITSCH

G8-2774
AMINE REBOILER
15/28-240 BKU TEMA 'C'
TS:1034 KPA MOP @-20/178 DEG C, 1.5MM CA
SS: 517KPA MOP @-20/178 DEG C, 3.0MM CA
DUTY: 800,000 KW + 20% SPARE

V2-2771-1/2/3
AMINE SURGE/MAKE-UP WATER/MAKE-UP AMINE
243MM OD X 3487MM HIGH, ATMOSPHERIC
V2-2771-1: 8300 LITERS
V2-2771-2: 8400 LITERS
V2-2771-3: 1900 LITERS

E10-2773-1/2
AMINE/WATER BOOSTER PUMPS
UNION 38MM X 50MM X 178MM VCM
2.2 KW 3/80/480V EX. PROOF
CAPACITY: 13 M3/HR @ 24M HEAD

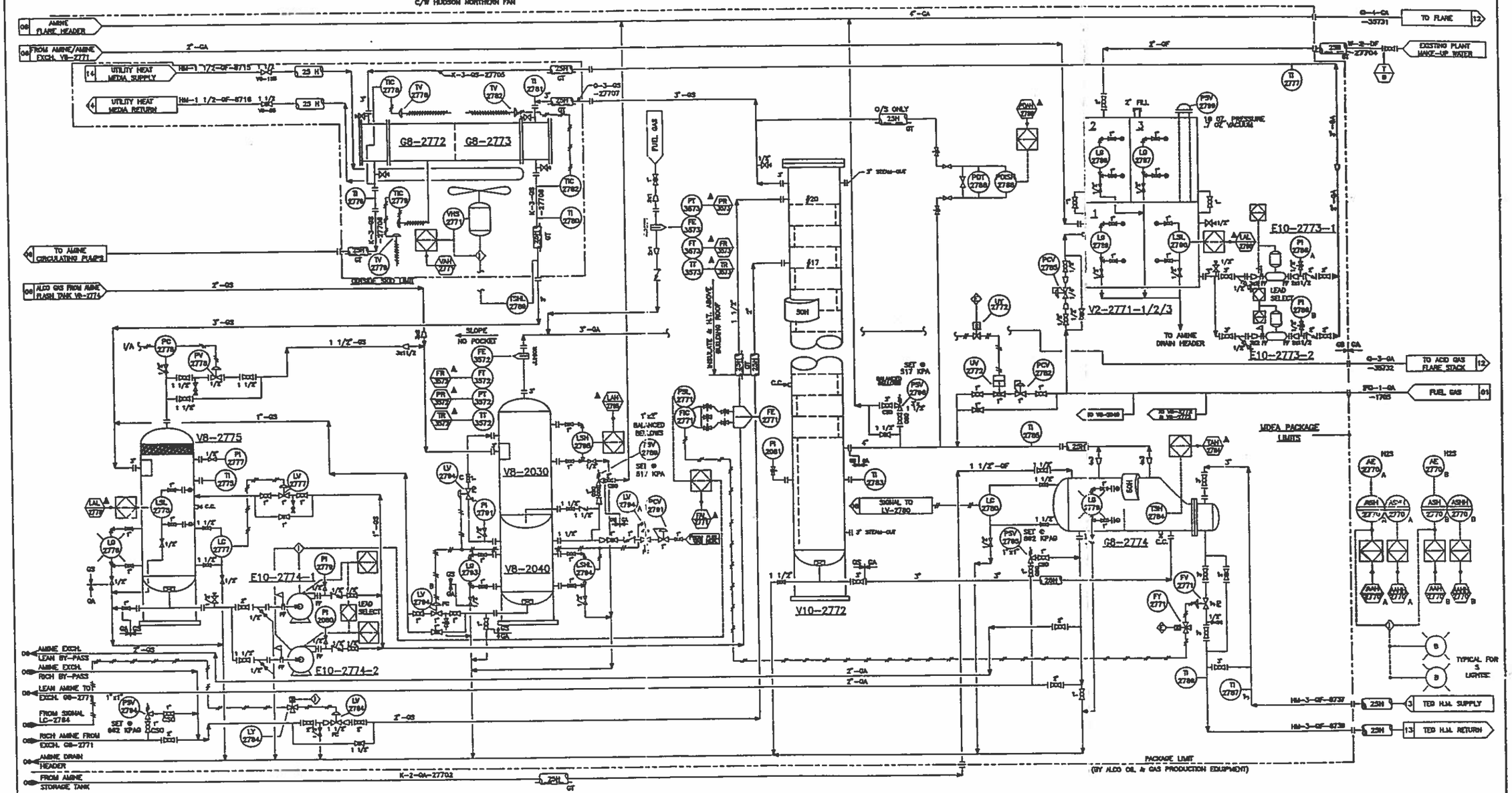

GENERAL NOTES
• ALL LINES H.T. & INSULATED OUTSIDE BUILDING ONLY.
▲ DESIGNATES AMOCO SUPPLIED INSTRUMENTS AND EQUIPMENT.

REFERENCE DRAWINGS	
NUMBER	TITLE
	ALCO DRAWINGS A-13258 SHEET 2 of 2

REVISION				
NO.	DESCRIPTION	BY	DATE	CHK
0	ISSUED FOR CONSTRUCTION	T.L.	98-10-01	EG
1	RE-ISSUED FOR CONSTRUCTION	T.L.	98-10-02	EG
2	GENERAL REVISIONS & UPDATE	T.L.	98-10-03	EG
3	AS BUILT	J.S.	98-10-03	EG

FOR AS BUILT DRAWING SEE
ALCO DWG. A-13258 SHT 2 OF 2

ORIGINAL REV. 0 PERMIT STAMP
SIGNED BY B. C. CAMPBELL 98-10-03

ORIGINAL REV. 0 PROFESSIONAL ENGINEER STAMP
SIGNED BY E. GMENZ 98-10-03

Macdonald Engineering Projects Ltd.
CALGARY ALBERTA CANADA

DRAWN BY	CHECKED BY	APPROVED BY	DATE
T. LACKO	E. GMENZ	E. GMENZ	98-05-19

AMOCO CANADA PETROLEUM COMPANY LTD.
MPSI SOLUTION GAS DEBOTTLENECK PROJECT
MDEA GAS SWEETENING UNIT
PIPING & INSTRUMENTATION DIAGRAM

SCALE: N/A | A1 | 11-06-02-07 | REV. 3

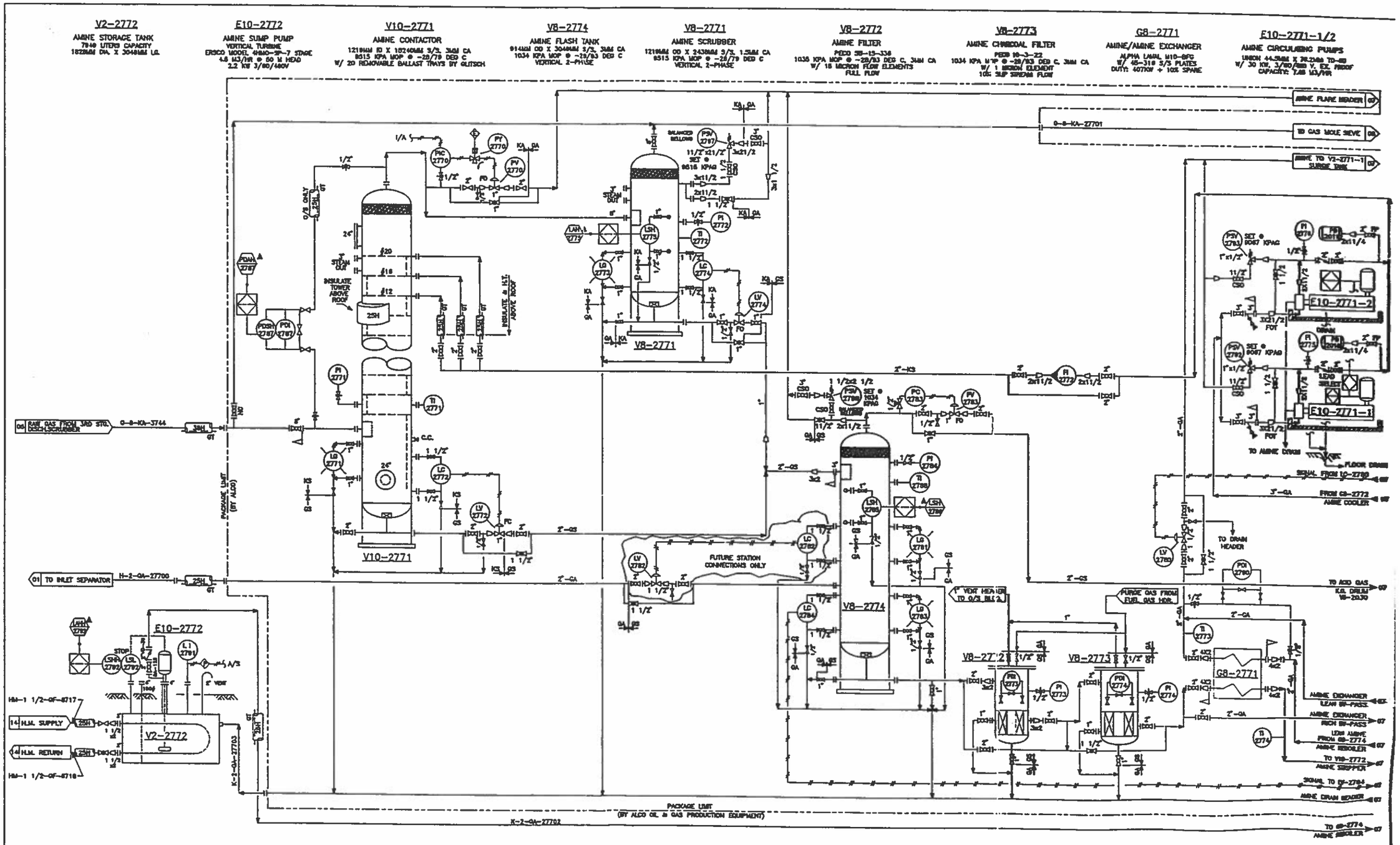

GENERAL NOTES	REFERENCE DRAWINGS		REVISION				
• ALL LINES H.T. & INSULATED OUTSIDE BUILDING ONLY.	NUMBER	TITLE	NO.	DESCRIPTION	BY	DATE	CHK.
▲ DESIGNATES AMOCO SUPPLIED INSTRUMENTS AND EQUIPMENT.		ALCO DRAWING A-13258 SHEET 1 of 2	0	ISSUED FOR CONSTRUCTION	T.L.	1998-06-04	ED
			1	RE-ISSUED FOR CONSTRUCTION	T.L.	1998-06-08	ED
			2	GENERAL REVISIONS & UPDATE	T.L.	1998-06-08	ED
			3	AS BUILT	J.S.	1998-06-30	ED

FOR AS BUILT DRAWING SEE ALCO DWG. A-13258 SHT. 1 OF 2

ORIGINAL REV. 0 PERMIT STAMP SIGNED BY L. C. CAMPBELL 98-10-03

ORIGINAL REV. 0 PROFESSIONAL ENGINEER STAMP SIGNED BY E. GMENEZ 98-10-03

VanAmerongen Engineering Projects Ltd.

DRAWN BY	CHECKED BY	APPROVED BY	DATE
T. LUCAS	E. GMENEZ	E. GMENEZ	98-05-19

AMOCO CANADA PETROLEUM COMPANY LTD.

NIPISI SOLUTION GAS DEBOTTLENECK PROJECT
MDEA GAS SWEETENING UNIT
PIPING & INSTRUMENTATION DIAGRAM

SCALE: N/A | A1 | 11-06-02-06 | REV. 3

V2-2772	E10-2772	V10-2771	V8-2774	V8-2771	V8-2772	V8-2773	G8-2771	E10-2771-1/2
AMINE STORAGE TANK 7949 LITERS CAPACITY 1828MM DIA. X 3048MM LG.	AMINE SUMP PUMP VERTICAL TURBINE ERSCO MODEL 4HMO-SP-7 STAGE 4.5 M3/HR @ 50 M HEAD 2.2 KW 3/60/460V	AMINE CONTACTOR 1219MM ID X 15240MM S/S, 3MM CA 9515 KPA MOP @ -28/79 DEG C W/ 20 REMOVABLE BALLAST TRAYS BY GUTSCH	AMINE FLASH TANK 914MM OD X 3049MM S/S, 3MM CA 1034 KPA MOP @ -28/93 DEG C VERTICAL 2-PHASE	AMINE SCRUBBER 1219MM OD X 2438MM S/S, 1.5MM CA 9515 KPA MOP @ -28/79 DEG C VERTICAL 2-PHASE	AMINE FILTER PECO 55-15-336 1035 KPA MOP @ -28/93 DEG C, 3MM CA W/ 15 MICRON FLOW ELEMENTS FULL FLOW	AMINE CHARCOAL FILTER PECO 10-3-22 1034 KPA MOP @ -28/93 DEG C, 3MM CA W/ 1 MICRON ELEMENT 10% SLIP STREAM FLOW	AMINE/AMINE EXCHANGER ALPHA LAVAL M10-BFG W/ 45-316 S/S PLATES CAPACITY: 407KW + 10% SPARE	AMINE CIRCULATING PUMPS UNION 44.5MM X 78.2MM TD-60 W/ 30 KW, 3/60/460 V, EX. PROOF CAPACITY: 7.45 M3/HR

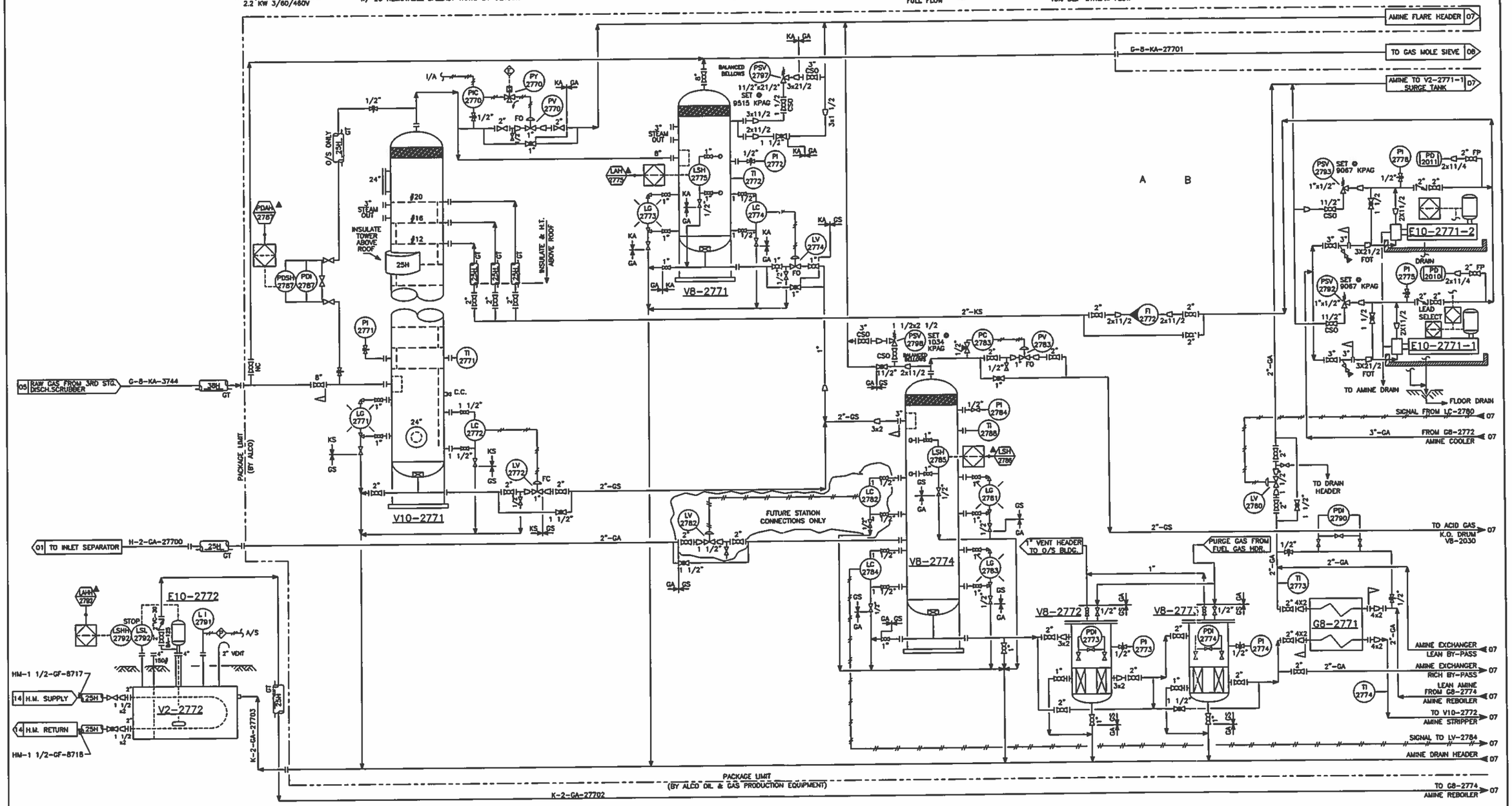

AC-092-58 AC D126258

GENERAL NOTES

- ALL LINES H.T. & INSULATED OUTSIDE BUILDING ONLY.
- ▲ DESIGNATES AMOCO SUPPLIED INTRUMENTS AND EQUIPMENT.

REFERENCE DRAWINGS

NUMBER	TITLE
	ALCO DRAWING A-13258 SHEET 1 of 2

REVISION

NO.	DESCRIPTION	BY	DATE	CHK.
0	ISSUED FOR CONSTRUCTION	T.L.	1989-06-30	EG
1	RE-ISSUED FOR CONSTRUCTION	T.L.	1989-06-30	EG
2	GENERAL REVISIONS & UPDATE	T.L.	1990-02-20	EG
3	AS BUILT	J.S.	1990-06-26	EG
4	ADDED AMOCO DWG. NO.	K.T.	1991-02-10	

FOR AS BUILT DRAWING SEE ALCO DWG. A-13258 SHT. 1 OF 2

ORIGINAL REV. 0 PERMIT STAMP SIGNED BY B. C. CAMPBELL 89-10-03

ORIGINAL REV. 0 PROFESSIONAL ENGINEER STAMP SIGNED BY E. GNENZ 89-10-03

CONTRACTOR DWG. NO. 11-06-02-06

Macdonald Engineering Projects Ltd.
CALGARY ALBERTA CANADA

DRAWN BY:	CHECKED BY:	APPROVED BY:	DATE:	SCALE:		REV.
T. LACKO	E. GNENZ	E. GNENZ	89-05-19	N/A	A1	4

AMOCO CANADA PETROLEUM COMPANY LTD.

2-11-80-8W5M
NIPISI SOLUTION GAS DEBOTTLENECK PROJECT
MDEA GAS SWEETENING UNIT
PIPING & INSTRUMENTATION DIAGRAM

D-NIP-220-39

This drawing and its contents is owned and the property of Macdonald Engineering Projects Ltd. They are issued on the particular express agreement that they will not be reproduced, copied, outlined or used except in the manner may published by any person without by the owner.

V8-2775
REFLUX ACCUMULATOR
324MM OD X 1524MM S/S, 3MM CA
517 KPA MOP @ -28/149 DEG C
VERTICAL 2-PHASE

E10-2774-1/2
REFLUX PUMPS
UNION 38MM X 50MM X 178MM VCM
W/ 3/60/460V EX. PROOF
CAPACITY: 2.3M3/HR @ 38.5M HEAD
TRIM: 316 SS

G8-2772/G8-2773
AMINE COOLER/REFLUX CONDENSER
ACE MODEL E93S W/ 15 KW 3/60/460V EX. PROOF
G8-2772: 1034 KPA MOP @ -28/178 DEG C, 1.5MM CA
DUTY: 144 KW + 20% SPARE
G8-2773: 1034 KPA MOP @ -28/178 DEG C, 3MM CA
DUTY: 350 KW + 20% SPARE
C/W HUDSON NORTHERN FAN

V8-2030/V8-2040
ACID GAS FLARE K.O./BLOWCASE
324MM OD X 1829MM S/S, 3MM CA
324MM OD X 610MM S/S, 3MM CA
517 KPA MOP @ -28/149 DEG C

V10-2772
AMINE STRIPPER
609MM OD X 13564MM S/S, 3MM CA
517 KPA MOP @ -28/149 DEG C
W/ 20 CARTRIDGE TYPE TRAYS
VALVE TRAYS BY GLITSCH

G8-2774
AMINE REBOILER
15/28-240 BKU TEMA 'C'
TS:1034 KPA MOP @-20/178 DEG C, 1.5MM CA
SS: 517KPA MOP @-20/178 DEG C, 3.0MM CA
DUTY: 600,000 KW + 20% SPARE

V2-2771-1/2/3
AMINE SURGE/MAKE-UP WATER/MAKE-UP,AMINE
2438MM OD X 3657MM HIGH, ATMOSPHERIC
V2-2771-1: 8300 LITERS
V2-2771-2: 5400 LITERS
V2-2771-3: 1900 LITERS

E10-2773-1/2
AMINE/WATER BOOSTER PUMPS
UNION 38MM X 50MM X 178MM VCM
2.2 KW 3/60/460V EX. PROOF
CAPACITY: 7.5 M3/HR @ 24M HEAD

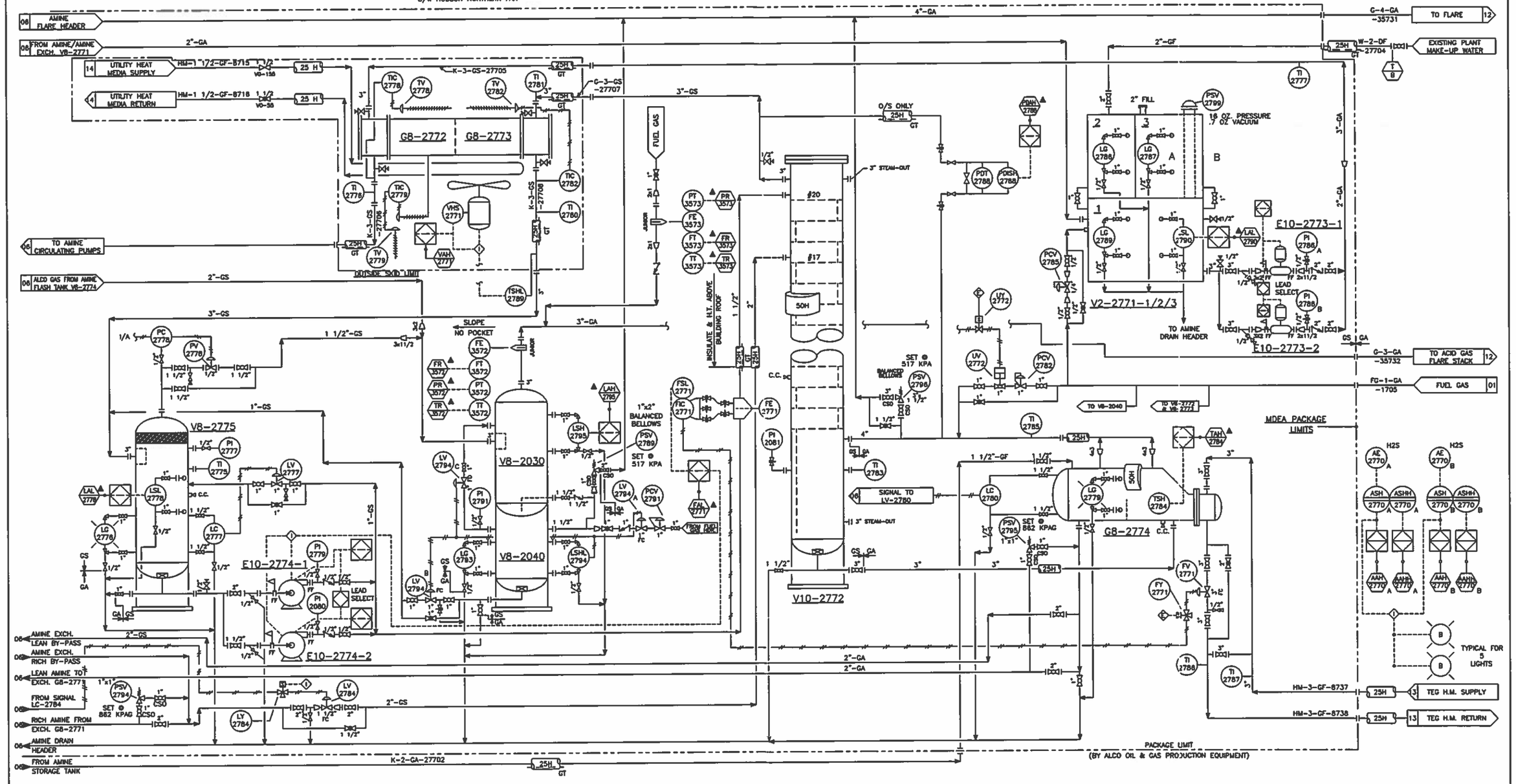

AC-092-59 AC D126259

GENERAL NOTES	REFERENCE DRAWINGS		REVISION				
* ALL LINES H.T. & INSULATED OUTSIDE BUILDING ONLY.	NUMBER	TITLE	NO.	DESCRIPTION	BY	DATE	CHK.
▲ DESIGNATES AMOCO SUPPLIED INSTRUMENTS AND EQUIPMENT.		ALCO DRAWINGS A-13258 SHEET 2 of 2	0	ISSUED FOR CONSTRUCTION	T.L.	1989 08-31	EG
			1	RE-ISSUED FOR CONSTRUCTION	T.L.	1989 09-29	EG
			2	GENERAL REVISIONS & UPDATE	T.L.	1989 12-08	EG
			3	AS BUILT	J.S.	1990 02-28	EG
			4	ADDED AMOCO DWG. NO.	K.T.	1990 03-16	

FOR AS BUILT DRAWING SEE ALCO DWG. A-13258 SHT 2 OF 2

ORIGINAL REV. 0 PERMIT STAMP SIGNED BY B. C. CAMPBELL 89-10-03

ORIGINAL REV. 0 PROFESSIONAL ENGINEER STAMP SIGNED BY E. GNENZ 89-10-03

CONTRACTOR DWG. NO. 11-06-02-07

Macdonald Engineering Projects Ltd.
CALGARY ALBERTA CANADA

DRAWN BY: T. LACKO | CHECKED BY: E. GNENZ | APPROVED BY: E. GNENZ | DATE: 89-05-19 | SCALE: N/A | A1

AMOCO CANADA PETROLEUM COMPANY LTD.

2-11-80-BW5M
NIPISI SOLUTION GAS DEBOTTLENECK PROJECT
MDEA GAS SWEETENING UNIT
PIPING & INSTRUMENTATION DIAGRAM

D-NIP-220-40 REV. 4

This drawing and the design it covers are the property of Macdonald Engineering Projects Ltd. They are issued on the permanent express agreement that they will not be reproduced, traced, outlined or used except as the holder may permitted by any other consent in the owner.