REV. NO.	REVISION NOTE	DATE	SIGN	CHECKED by
0	First issue	01.09.2022	PKR	CSI

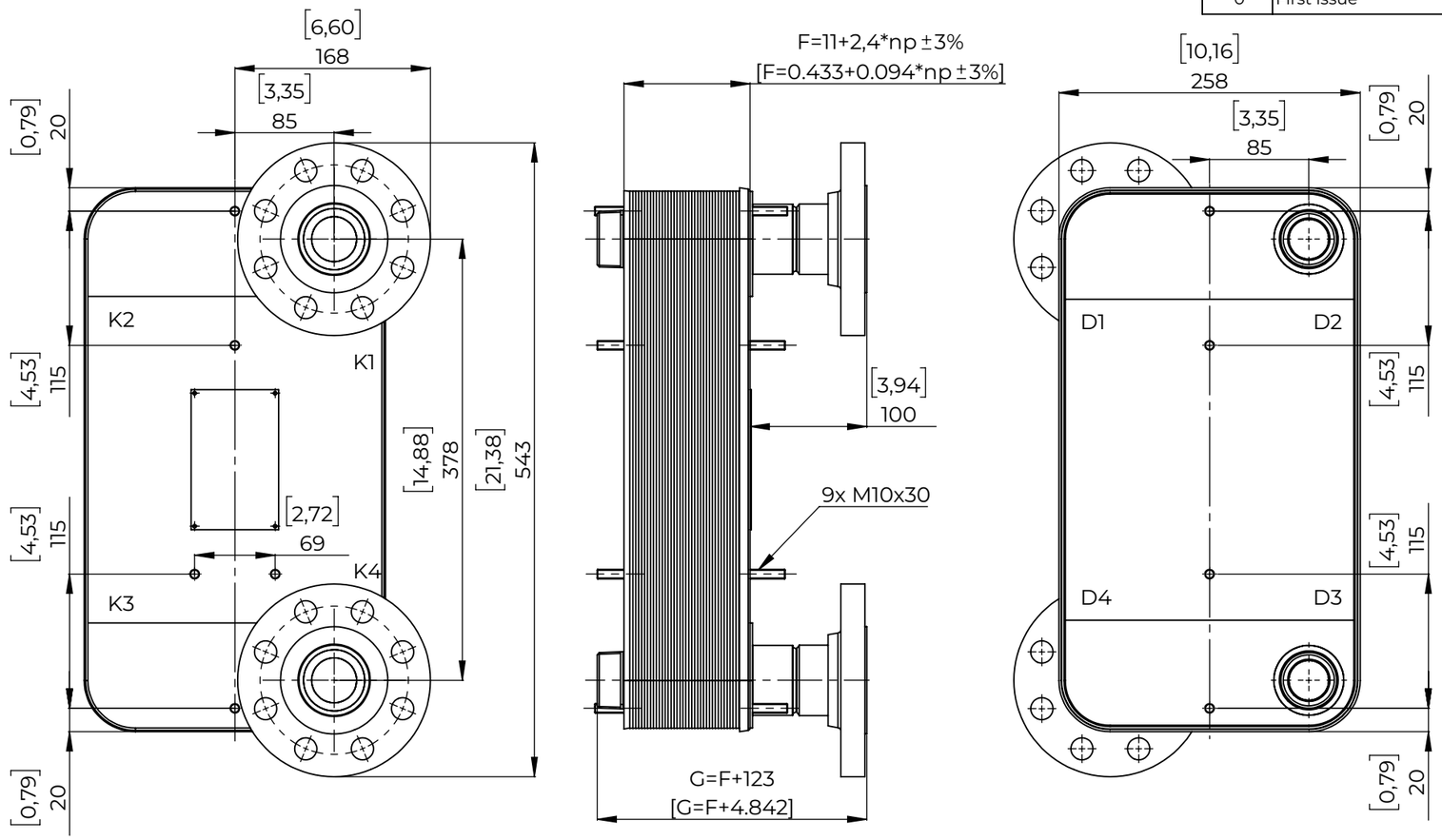

Notes:
1. np - number of plates

Inspection code	ASME SEC. VIII, Div.1, ED 2021			
Design -method -acc. to	Calculation		Experimental	
	☒		☒	
	ASME BPVC SEC. VIII, Div.1, ED 2021			
Inspection by				
Specification	Symbol	Unit	Chamber	
			Side 1	Side 2
Max. allowable pressure	PS	psi	362	362
Max. allowable temperature	TSmax	°F	445	445
Min. allowable temperature	TSmin	°F	-150	-150
Test pressure	PT	psi	522	522

COMPONENT	MATERIALS
Nozzels	SA-479M Grd. 316L bar
Flanges	SA-182 Grd. F321L forgings
Heating plates	SA-240M Grd. 316L plate
Reinforcement plates	SA-240M Grd. 304L plate

3D View

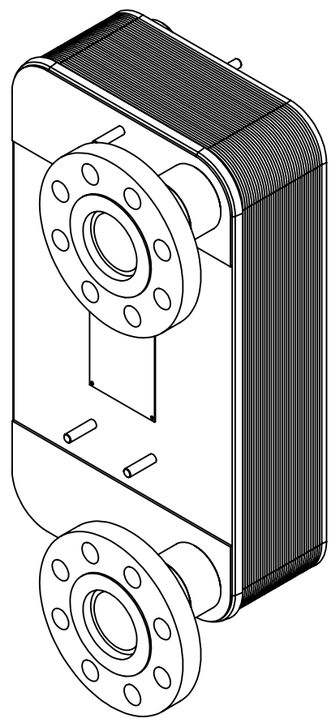

Nozzle D2, D3
1:1

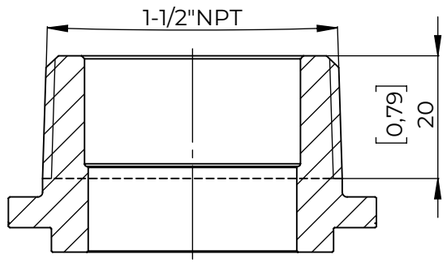

NOZZLE DATA

POS.	DESCRIPTION	
K1	INLET OF MEDIUM 1	Flange 2" class 300 S.O.R.F ASME B16.5
K4	OUTLET OF MEDIUM 1	Flange 2" class 300 S.O.R.F ASME B16.5
D2	OUTLET OF MEDIUM 2	Nozzle 1-1/2" NPT
D3	INLET OF MEDIUM 2	Nozzle 1-1/2" NPT

			SIGN		DATE	MATERIAL	ITEM
			DESIGNED by	PKR	01.09.2022	acc. to BOM	LC110 Copper Brazed Plate Heat Exchanger Gas Application
REVISION 0	SCALE 1:5	SHEET A3	DRAWN by	PKR	01.09.2022		
	WEIGHT [kg]	1/1	CHECKED by	CSI	01.09.2022	STANDARD ASME BPVC Sec. VIII Div.1 ED 2021	DRAWING NO. M22131-2A
			APPROVED by	WPO	01.09.2022		