STANDARD WELD DETAILS (N.T.S.)

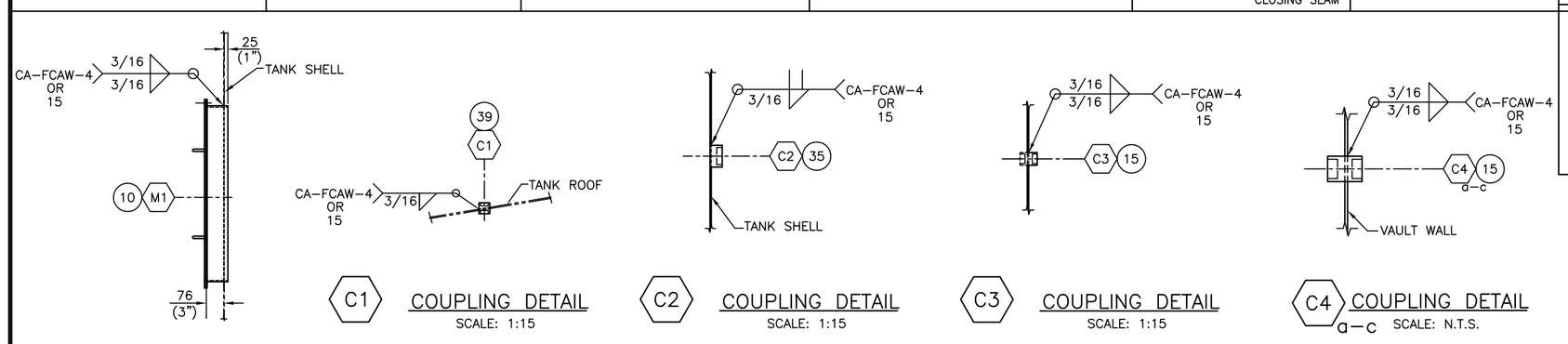

M1 MANWAY DETAIL
SCALE: N.T.S.

C1 COUPLING DETAIL
SCALE: 1:15

C2 COUPLING DETAIL
SCALE: 1:15

C3 COUPLING DETAIL
SCALE: 1:15

C4 a–c COUPLING DETAIL
SCALE: N.T.S.

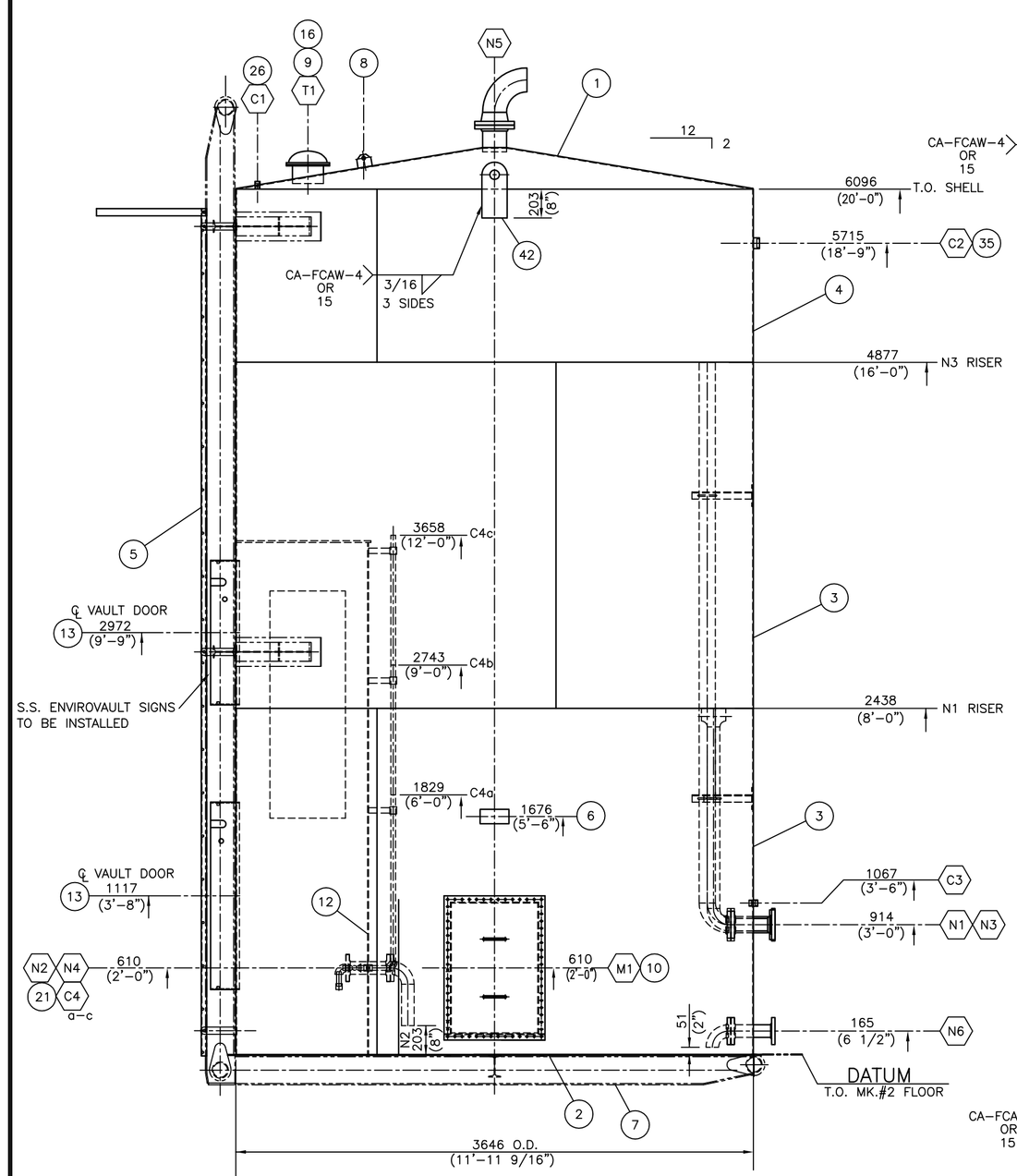

ELEVATION

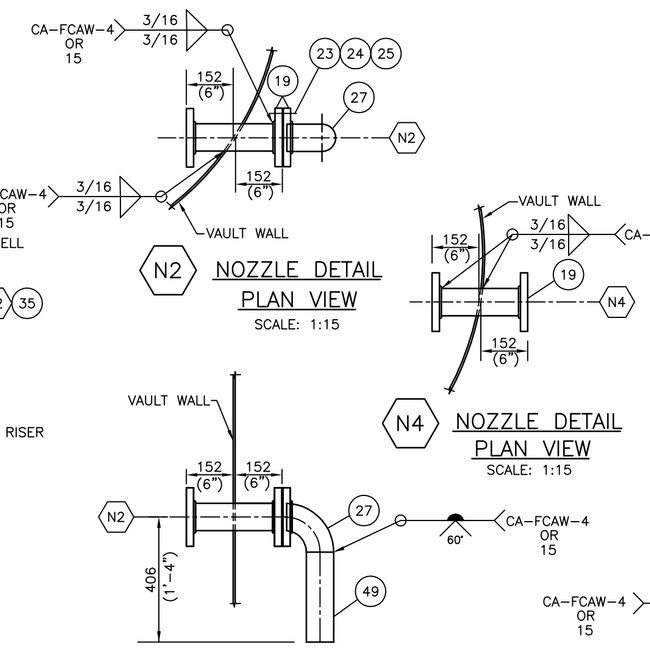

N2 NOZZLE DETAIL PLAN VIEW
SCALE: 1:15

N4 NOZZLE DETAIL PLAN VIEW
SCALE: 1:15

N2 NOZZLE DETAIL ELEV. VIEW
SCALE: 1:15

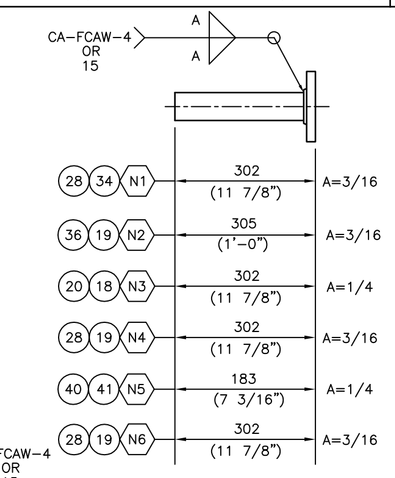

SPOOL DETAIL

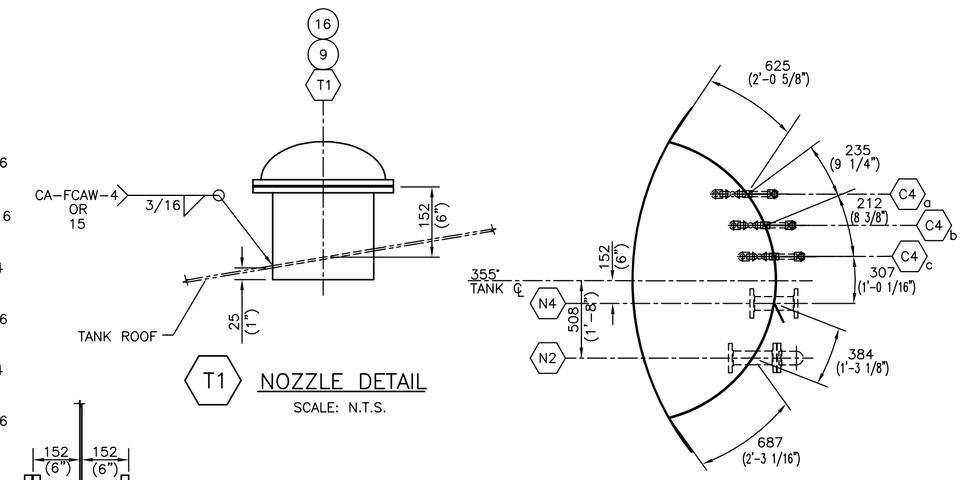

T1 NOZZLE DETAIL
SCALE: N.T.S.

ENVIRO–VAULT PLAN VIEW

N6 NOZZLE DETAIL
SCALE: 1:15

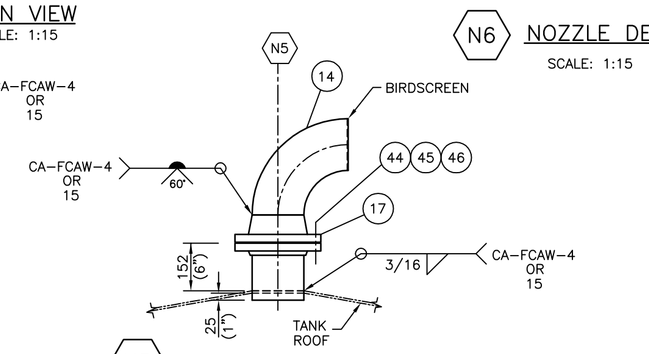

N5 NOZZLE DETAIL
SCALE: 1:15

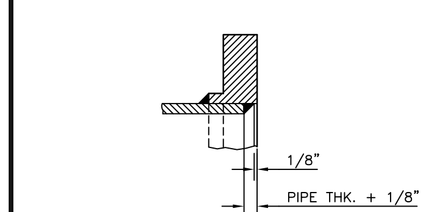

SLIP–ON FLANGE WELD DETAIL
SCALE: N.T.S.

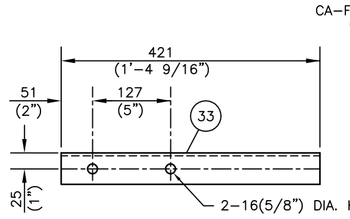

MK#33 DETAIL
SCALE: NTS

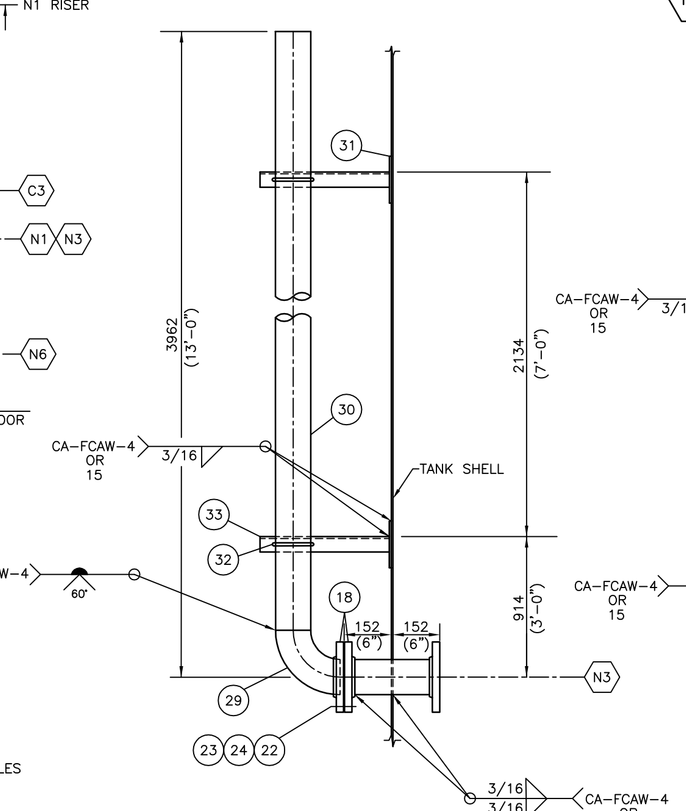

N3 NOZZLE DETAIL
SCALE: 1:15

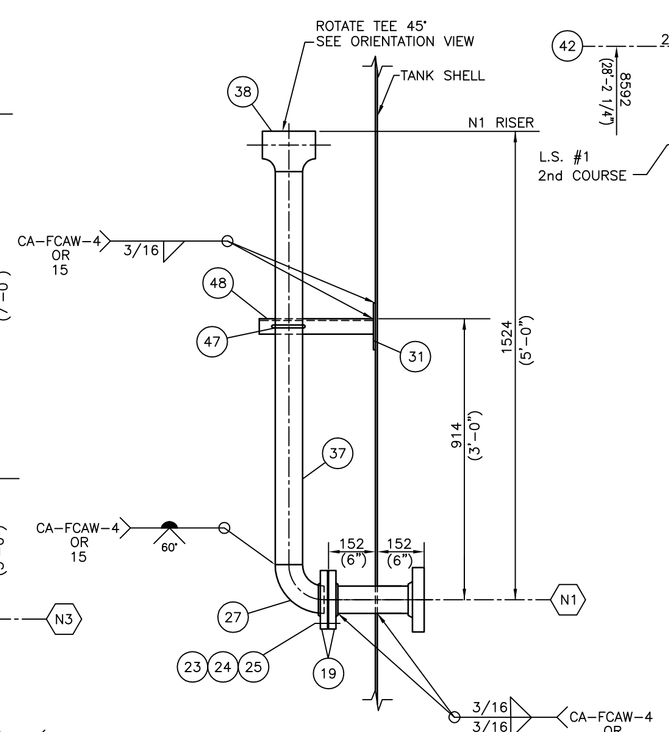

N1 NOZZLE DETAIL
SCALE: 1:15

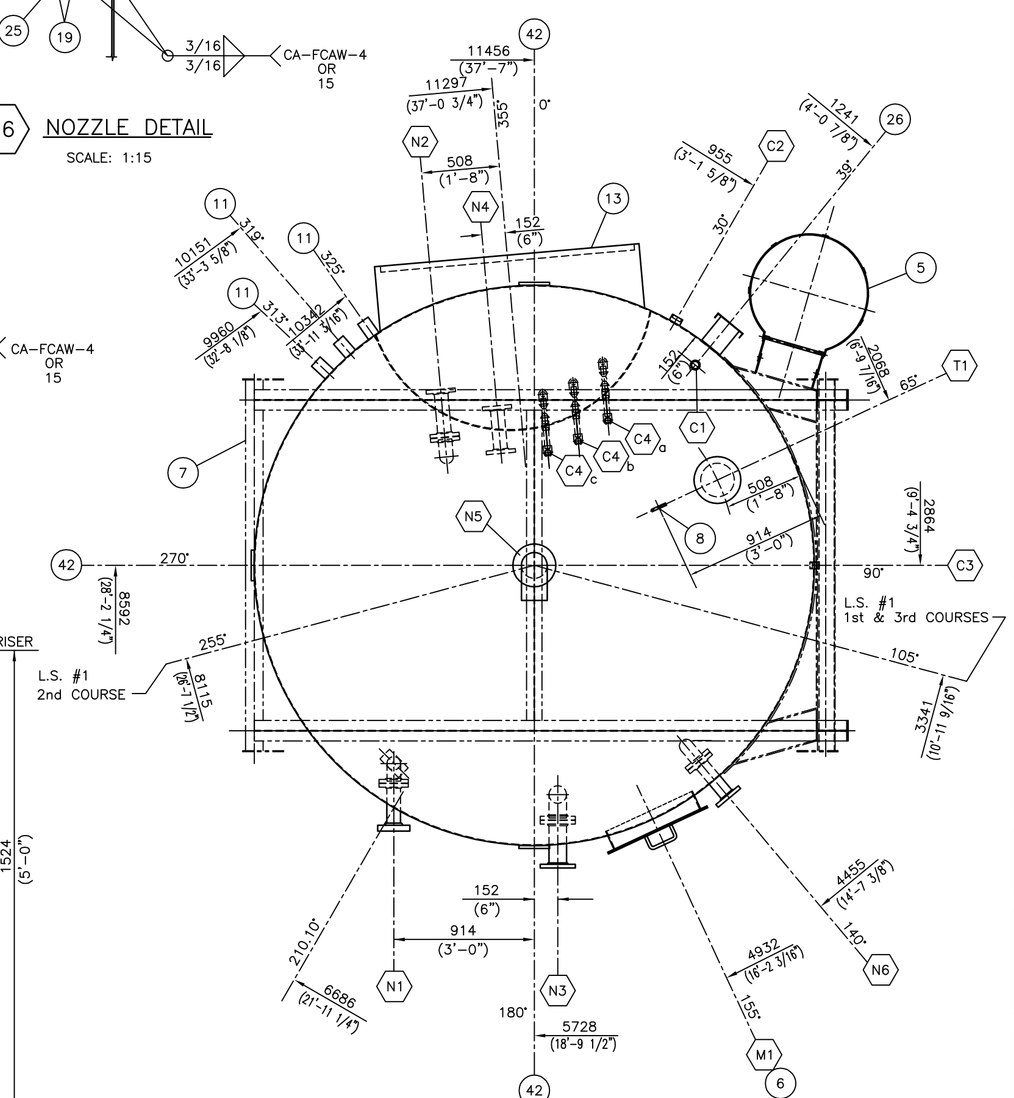

ORIENTATION

NOTE: CONT'D.

5. LIST OF PARTS & PRT#'S OF PEACELAND STANDARD LEVEL INDICATOR
   - PRT–6172 x 2
   - PRT–5957
   - PRT–1622
   - PRT–5935
   - PRT–1257
   - PRT–5958 x 5
   - STAINLESS CABLE 1/8" x 22'–0" LG.
   - CLAMPS FOR STAINLESS CABLE 1/8" x 4

CUSTOMER SPECIFICATIONS

DESIGN CODE: API–12F (MODIFIED)
SERIAL NO.: 031313–1 TO 2
DESIGN PRESSURE: 16 oz./ 0.4 oz. VAC.
DESIGN TEMPERATURE: –13°C(8.6°F) TO 93°C(200°F)
SERVICE: WATER, OIL, GAS (SWEET)
OPERATING LEVEL: –
CORROSION ALLOWANCE: NONE
OTHER:

FINISHING

EXTERNAL: NONE

INTERNAL: PAINT INSIDE OF THERMOVAULT WITH BLACK ELASTOMERIC SEALER.

TESTING: AIR TEST TO 16 oz.

INSULATION: 38(1 1/2") URETHANE FOAM INSULATION C/W ELASTOMERIC SEALER. (DESERT TAN)

NOZZLE SCHEDULE

MK	NO	SIZE	SCH	RATE	TYPE	INT. PROJ.	EXT. PROJ.	REPAD YES	REPAD NO	DESCRIPTION
N1	1	89 / 3"	STD	CLASS 600	RFSO	152 / 6"	152 / 6"		✓	INLET C/W RISER
N2	1	89 / 3"	STD	CLASS 150	RFSO	152 / 6"	152 / 6"		✓	DRAIN C/W DOWNCOMER (IN VAULT)
N3	1	114 / 4"	STD	CLASS 150	RFSO	152 / 6"	152 / 6"		✓	SPILLOVER/OUTLET C/W RISER TO 16'
N4	1	89 / 3"	STD	CLASS 150	RFSO	152 / 6"	152 / 6"		✓	CLEANOUT (IN VAULT)
N5	1	168 / 6"	STD	CLASS 150	RFSO	25 / 1"	152 / 6"		✓	VENT C/W 90° ELBOW & BIRDSCREEN
N6	1	89 / 3"	STD	CLASS 150	RFSO	152 / 6"	152 / 6"		✓	CLEANOUT C/W ELBOW DOWN
C1	1	19 / 3/4"	–	3000#	FULL CPLG.	–	HALF		✓	GAUGEBOARD
C2	1	51 / 2"	–	3000#	HALF CPLG.	–	FULL		✓	HLSD
C3	1	25 / 1"	–	3000#	FULL CPLG.	HALF	HALF		✓	T.I.
C4 a–c	3	25 / 1"	–	3000#	FULL CPLG.	–	HALF		✓	SAMPLERS C/W BALL VALVES & RISERS (IN VAULT)
T1	1	219 / 8"	STD	–	FAB'D	25 / 1"	152 / 6"		✓	THIEF HATCH NOZZLE C/W ENARDO 660 SET AT 16 oz. PRESS. 0.4oz. VAC.
M1	1	610x914 / 2'x3'	–	API–12F	FAB'D	25 / 1"	76 / 3"		✓	SHELL MANWAY C/W COVER

MATERIAL LIST

MK	QTY.	DESCRIPTION	MATERIAL	WT
1	2	HALF ROOF PLATE 3/16" THK. x 12'–0 1/4" FLAT DIA.	PRT–1003	1205
2	2	HALF FLOOR PLATE 1/4" THK. x 12'–4" DIA.	PRT–5926	1219
3	2	SHELL PLATE 3/16" THK. x 8'–0" x 37'–6 3/8" LG.	SA–36/44W	4600
4	1	SHELL PLATE 3/16" THK. x 4'–0" x 37'–6 3/8" LG.	SA–36/44W	1150
5	1	LADDER WITH SINGLE HOOP	PRT–2889	180
6	1	TANK NAMEPLATE BRACKET C/W NAMEPLATE	PRT–2896 PRT–1473	5
7	1	"L"–SHAPED SKID (TWO SADDLE DESIGN)	PRT–5700 PRT–5697	2020
8	1	TANK ROOF SAFETY HARNESS LUG	PRT–2533	1
9	1	THIEF HATCH NOZZLE	PRT–5716	20
10	1	SHELL MANWAY 2'–0" x 3'–0" C/W 1/4" COVER	PRT–5255 PRT–5250	160
11	3	CABLE BRACKET	REF. DWG. T–031313–B104	20
12	1	ENVIRO–VAULT – EV6WX12H–12' THERMO VAULT	–	1240
13	1	ENVIRO–VAULT DOOR	SEE ENVIROVAULT VAULT DRAWINGS	80
14	1	ELBOW 6" SCH STD x 90° L.R.	SA–234–WPB	5
15	4	FULL CPLG. 1" 3000# F.S. SCR'D	SA–105	4
16	1	ENARDO 660–ES–AL STD HATCH SET AT 16 oz. PRESS 0.4oz. VAC.	–	10
17	1	FLANGE 6" CLASS 150 RFWN x SCH STD BORE	SA–105	24
18	4	FLANGE 4" CLASS 150 RFSO	SA–105	48
19	9	FLANGE 3" CLASS 150 RFSO	SA–105	81
20	1	PIPE 4" SCH STD x 11 1/2" LG. SMLS PBE	SA–106–B	11
21	1	SAMPLE SYSTEM DETAIL	REF. DWG. T–031313–B102	87
22	1	GASKET 4" CLASS 150 RF x 1/8" THK.	PRT–1474	1
23	20	STUD 5/8" DIA. x 3 1/2" LG.	SA–193–B7	6
24	40	HEX NUT 5/8" NOM.	SA–194–2H	5
25	3	GASKET 3" CLASS 150 RF x 1/8" THK.	PRT–1364	3
26	1	PEACELAND STANDARD LEVEL INDICATOR	SEE NOTE 5	60
27	3	ELBOW 3" SCH STD x 90° L.R.	SA–234–WPB	15
28	3	PIPE 3" SCH STD x 11 9/16" SMLS PBE	SA–106–B	21
29	1	ELBOW 4" SCH STD x 90° L.R.	SA–234–WPB	9
30	1	PIPE 4" SCH STD x 12'–6" SMLS BOE x POE	SA–106–B	10
31	3	PLATE 1/4" x 6" DIA.	G40.21–44W	6
32	2	U–BOLT 1/2" x 4" NPS C/W 4 NUTS	C.S.	2
33	2	ANGLE 2" x 2" x 3/16" x 1'–4 9/16" LG.	G40.21–44W	7
34	1	FLANGE 3" CLASS 600 RFSO	SA–105	12
35	1	HALF CPLG. 2" 3000# F.S. SCR'D	SA–105	1
36	1	PIPE 3" SCH STD x 11 11/16" LG. SMLS PBE	SA–106–B	7
37	1	PIPE 3" SCH STD x 4'–2 3/8" SMLS BOE x POE	SA–106–B	32
38	1	TEE 3" SCH STD	SA–234–WPB	10
39	1	FULL COUPLING 3/4" 3000# F.S. SCR'D	SA–105	1
40	1	PIPE 6" SCH STD x 6 13/16" LG. SMLS PBE	SA–106–B	11
41	1	FLANGE 6" CLASS 150 RFSO	SA–105	18
42	3	LIFTING LUG	PRT–4273	30
43				
44	8	STUD 3/4" DIA. x 4" LG.	SA–193–B7	2
45	16	HEX NUT 3/4" NOM.	SA–194–2H	3
46	1	GASKET 6" CLASS 150 RF x 1/8" THK.	PRT–1217	1
47	1	U–BOLT 3/8" x 3" NPS C/W 4 NUTS	C.S.	1
48	1	ANGLE 2" x 2" x 3/16" x 1'–1 3/8" LG.	G40.21–44W	3
49	1	PIPE 3" SCH STD x 11 9/16" SMLS BOE x POE	SA–106–B	7
50		*QTY'S ARE FOR ONE TANK – 2 REQ'D		

NOTE:
1. ALL DIMENSIONS ARE IN S.I. & IMPERIAL UNITS. DIMENSIONS IN BRACKETS ARE IMPERIAL HARD CONVERSIONS FOR SHOP REFERENCE ONLY.
2. FLANGE AND BOLT HOLES TO STRADDLE PRINCIPAL ℄'S OF TANK.
3. ALL NOZZLE PROJECTIONS GIVEN ARE ALONG THE NOZZLE CENTERLINE.
4. ALL FLANGE RATINGS TO BE ASME B16.5–2009.

INSULATION	500
SUBTOTAL	12954
x 1.06	
TOTAL	13731 lbs

REVISIONS

NO	DATE (d/m/y)	REVISIONS	BY	APPD
0	09/10/13	ISSUED FOR CONSTRUCTION	RR	

THE DRAWING IS THE PROPERTY OF ENVIROVAULT CORPORATION AND IS TO BE USED ONLY IN CONJUNCTION WITH PERFORMANCE OF WORK BY ENVIROVAULT CORPORATION.REPRODUCTION OR USE OF IN WHOLE OR IN PART FOR ANY OTHER PURPOSE IS EXPRESSLY FORBIDDEN

ENVIROVAULT® the future standard in tank design

CLIENT
ENVIROVAULT CANADA LTD.
P.O.# P2580

DWG TITLE
THERMOVAULT TANK #1
GENERAL ARRANGEMENT

SIZE	VOLUME		
3646mm O.D. x 6096mm HIGH (11'–11 9/16" NOM. x 20'–0" HIGH)	TANK 63.6 CUBIC METERS (400 Bbl) NOM.		
SCALE 1:30	DWN BY R. RANASINGHE	DWG NO. T–031313–D101	SHEET NO. 1 of 1 / REV. NO. 0
DATE (d/m/y) 04/10/13	CHKD / APPD		

DRAFTING\PROJECTS\WO–031313\T–031313–D101