THIS DRAWING AND THE DESIGN IT COVERS ARE CONFIDENTIAL AND THE PROPERTY OF PROPAK SYSTEMS LTD., AND SHALL NOT BE DISCLOSED TO OTHERS OR REPRODUCED IN ANY MANNER OR USED FOR ANY PURPOSE WHATSOEVER EXCEPT BY WRITTEN CONSENT OF PROPAK.

- LOCALLY MOUNTED
- TWO INSTRUMENTS IN THE SAME HOUSING
- PANEL MOUNTED IN CONTROL ROOM
- BEHIND PANEL MOUNTED IN CONTROL ROOM
- INSTRUMENT MOUNTED ON LOCAL PANEL
- BEHIND PANEL MOUNTED ON LOCAL PANEL
- LOCAL DISPLAY (DATALINER) OR ANNUNCIATOR
- H / L — HIGH/LOW LEVEL ALARMS
- PB — PUSH BUTTON
- HS — HAND SWITCH
- STATUS LIGHT
- R — LOCAL RESET
- I / 100A — INTERLOCK (E.G. SHOWN: INTERLOCK #100A)
- DISTRIBUTED CONTROL SYSTEM
- TAH 100 — PROGRAMMABLE LOGIC CONTROL SYSTEM
- DCS 100 — DISTRIBUTED CONTROL SYSTEM (DCS) PANEL (E.G. SHOWN: DCS CONTROL PANEL #100)
- PLC 900 — PROGRAMMABLE LOGIC CONTROL (PLC) PANEL (E.G. SHOWN: PLC CONTROL PANEL #900)
- MCC — MOTOR CONTROL CENTRE (MCC)
- LOW SELECT
- I / P — CURRENT/ PRESSURE TRANSDUCER
- ELECTRICAL LEAD
- DATA LINK
- ESD * — EMERGENCY SHUTDOWN * SHUTDOWN LEVEL (1,2,3)
- DIAPHRAGM, SPRING OPPOSED
- DIAPHRAGM WITH POSITIONER
- MANUAL HANDWHEEL OVERRIDE
- CYLINDER, PISTON OPERATED
- XX — NOTES

- CHD — TO DRAIN SYSTEM (E.G. SHOWN: CLOSED HYDROCARBON DRAIN)
- OPEN DRAIN
- 25H — HOT INSULATION (E.G. SHOWN: 25mm THICK)
- 25C — COLD INSULATION (E.G. SHOWN: 25mm THICK)
- ET, 25H — ELECTRICAL (ET), HOT GLYCOL (GT), STEAM (ST) HEAT TRACING; HOT INSULATION (E.G. SHOWN: 25mm THICK HOT INSULATION WITH ELECTRIC HEAT TRACING)
- SP — FLEXIBLE JOINT
- SP — EXPANSION JOINT
- SP — CONICAL STRAINER OR TEMPORARY SUCTION STRAINER
- SP — SPECIALTY ITEM
- SP — SPECTACLE BLIND NORMALLY CLOSED
- SP — SPECTACLE BLIND NORMALLY OPEN
- SP — SPADE/SLIP BLIND
- SP — HOSE CONNECTION
- T — TIE-IN POINT
- VENT TO ATMOSPHERE
- VENT TO ATMOSPHERE c/w HYDRAULIC SEAL

PIPING SYMBOLS

- INDICATES FLANGED VALVE (TYPICAL FOR ALL TYPES)
- INDICATES BUTT-WELDED, SCREWED OR SOCKET-WELDED VALVE (TYPICAL FOR ALL TYPES)
- BA = BALL VALVE
- CH = CHECK VALVE
- GA = GATE VALVE
- GL = GLOBE VALVE
- PL = PLUG VALVE
- NE = NEEDLE VALVE
- BU = BUTTERFLY VALVE
- ST = "Y" TYPE LINE STRAINER
- ST = "T" TYPE LINE STRAINER
- SOLENOID 2-WAY VALVE
- SOLENOID 3-WAY VALVE
- SOLENOID 4-WAY VALVE
- THREE WAY VALVE
- FOUR WAY VALVE
- ANGLE VALVE
- STOP CHECK ANGLE VALVE OR CHOKE
- CONCENTRIC REDUCER/INCREASER
- ECCENTRIC REDUCER/INCREASER
- SWAGE
- VALVE c/w BLEED
- BLEED RING

- PULSATION DAMPER
- PSV — PRESSURE SAFETY VALVE
- PRV — PRESSURE REDUCING REGULATOR OR FORWARD PRESSURE REGULATOR
- PRV — BACK PRESSURE REGULATOR
- dPRV — DIFFERENTIAL PRESSURE REGULATOR
- PRESSURE REDUCING REGULATOR WITH EXTERNAL PRESSURE CONNECTION
- PNEUMATIC LINE
- CAPILLARY TUBING
- TUBING LINE
- BLIND FLANGE
- PIPE CAP
- PIPE FLANGE
- PIPE UNION, NPT
- A B — SPEC. BREAK
- T OR V — STEAM TRAP/VENT

- PSE — RUPTURE DISC FOR PRESSURE RELIEF
- PSE — RUPTURE DISC FOR VACUUM RELIEF
- FE — TURBINE METER
- FE — POSITIVE DISPLACEMENT METER
- FE — ANNUBAR OR PITOT TUBE
- FE — CALIBRATED METER RUN WITH QUICK CHANGE FITTING
- FE — FLOW ELEMENT (ORIFICE) c/w PLATE
- RO — RESTRICTION ORIFICE c/w PLATE
- FQI — FLOW QUANTITY INDICATOR
- FG — FLOW SIGHT GLASS MONITOR
- FI — FLOW INDICATOR (ROTOMETER TYPE)
- STRAIGHTENING VANES
- VENTURI TUBE

		A	AH	AHL	AL	C	CV	DR	DV	E	FIC	G	GM	I	IC	IS	IT	K	L	Q	R	RC	RR	S	SC	SD	SDH	SDL	SE	SH	SL	SLL	SM	SO	SV	T	V	W	Y
		ALARM	ALARM HIGH	ALARM HIGH/LOW	ALARM LOW	CONTROLLER	CONTROL VALVE	DIFFERENTIAL RECORDER	DEPRESSURIZING VALVE	PRIMARY ELEMENT	RATIO CONTROLLER	GAUGE GLASS	GAUGE MAGNETIC	INDICATOR	INDICATOR CONTROLLER	INDICATOR SWITCH	INDICATOR TRANSMITTER	MANUAL/AUTOMATIC (STATION)	STATUS LIGHT (NOT ALARM)	INTERGRATION (TOTALIZER)	RECORDER	RECORDER CONTROLLER	RATIO RECORDER	SWITCH	SWITCH CLOSED	SHUTDOWN	SHUTDOWN HIGH	SHUTDOWN LOW	SAFETY ELEMENT (RUPTURE DISK)	SWITCH HIGH	SWITCH LOW	SWITCH LOW LOW	SWITCH MIDDLE	SWITCH OPEN	SAFETY VALVE	TRANSMITTER	VALVE	THERMOWELL	RELAY COMPUTING SOLENOID VALVE
A	ANALYSIS		AAH	AHL	AAL	AC	ACV	ADR		AE				AI	AIC		AIT				AR	ARC	ARR	AS			ASDH	ASDL		ASH	ASL		ASM			AT			AY
BJ	BURNER FAILURE	BJA																						BJS		BJSD													
C	CONDUCTIVITY		CAH	CHL	CAL	CC	CCV	CDR		CE				CI	CIC	CIS	CIT		CL		CR	CRC	CRR	CS			CSDH	CSDL		CSH	CSL		CSM			CT			CY
D	DENSITY		DAH	DAHL	DAL	DC	DCV	DDR		DE		DG		DI	DIC	DIS	DIT	DK	DL		DR	DRC	DRR	DS			DSDH	DSDL	DSE	DSH	DSL		DSM			DT			DY
dP	DIFFERENTIAL PRESSURE	dPA	dPAH	dPAHL	dPAL	dPC	dPCV	dPR						dPI	dPIC	dPIS	dPIT		dPL			dPRC		dPS		dPSD	dPSDH	dPSDL		dPSH	dPSL					dPT			dPY
E	EMERGENCY																									ESD												ESDV		EY
F	FLOW		FAH	FAHL	FAL	FC	FCV	FDR		FE	FFIC	FG		FI	FIC	FIS	FIT	FK	FL	FQ	FR	FRC	FRR	FS			FSDH	FSDL		FSH	FSL		FSM		FSV	FT			FY
G	GAS DETECTION		GAH							GE																	GSDH			GSH										
H	HAND (MANUAL)					HC	HCV								HRC									HS														HV		HY
J	POWER															JIC																					JT			JY
K	TIME	KA				KC	KCV	KDR											KL	KQ				KS													KT	KV		KY
L	LEVEL		LAH	LAHL	LAL	LC	LCV	LDR		LE		LG	LGM	LI	LIC	LIS	LIT		LL		LR	LRC	LRR	LS		LSD				LSH	LSL	LSLL	LSM			LT			LY
M	MOISTURE		MAH	MAHL	MAL	MC	MCV	MDR		ME				MI	MIC	MIS	MIT		ML		MR	MRC	MRR	MS			MSDH	MSDL		MSH	MSL		MSM			MT			MY
P	PRESSURE		PAH	PAHL	PAL	PC	PCV	PDR		PE				PI	PIC	PIS	PIT	PK	PL		PR	PRC	PRR	PS			PSDH	PSDL	PSE	PSH	PSL		PSM		PSV	PT			PY
R	REMOTE																																					RSDV		RY
S	SPEED		SAH	SAHL	SAL	SC	SCV	SDR		SE				SI	SIC	SIS	SIT	SK	SL		SR	SRC	SRR	SS			SSDH	SSDL		SSH	SSL		SSM			ST			SY
T	TEMPERATURE		TAH	TAHL	TAL	TC	TCV	TDR		TE				TI	TIC	TIS	TIT	TK	TL		TR	TRC	TRR	TS			TSDH	TSDL	TSE	TSH	TSL		TSM			TT		TW	TY
U	UNIT	UA							UDV										UL							USD														
V	VIBRATION		VAH			VC				VE				VI							VR			VS			VSDH			VSH						VT			
VI	VISCOSITY		VIAH	VIAHL	VIAL	VIC	VICV	VIDR		VIE				VII	VIIC	VIIS	VIIT		VIL		VIR	VIRC	VIRR	VIS		VISD				VISH	VISL		VISM			VIT			VIY
X	FIRE DETECTION	XA								XE																XSD				XSH									
Z	LIMIT OR POSITION		ZAH	ZAHL	ZAL					ZE						ZIS	ZIT		ZL						ZSC		ZSDH	ZSDL		ZSH	ZSL		ZSM	ZSO		ZT			ZY

No.	REVISION	BY	DATE	CKD	ENG
1	ISSUED FOR CONSTRUCTION	MAF	10/10/20	RHH	RHH

GENERAL NOTES

GENERAL NOTES

DATE: 2010/10/19 02:10 PM J:\JOBS10\101531\20-DRAWINGS\FLW\MFS-101531-100-01.DWG valeryk

APPROVED		DRAWN	
MECH./STRUCT.		BY	PSC
DATE		DATE	09/11/09
ELECTRICAL		CHECKED	
DATE		BY	D.LAW
PROJECT	D.LAW	DATE	09/11/09
DATE	09/11/09		
		SCALE	

PROPAK

STOCK REFRIGERATION UNIT – REF8B
LEGEND
MECHANICAL FLOWSHEET

DWG. No.: D-MFS-101531-100 SHT. 1 OF 6 REV. 1

PROPAK
440 East Lake Road,
Airdrie, Alberta
Canada T4A 2J8

THIS DRAWING AND THE DESIGN IT COVERS ARE CONFIDENTIAL AND THE PROPERTY OF PROPAK SYSTEMS LTD., AND SHALL NOT BE DISCLOSED TO OTHERS OR REPRODUCED IN ANY MANNER OR USED FOR ANY PURPOSE WHATSOEVER EXCEPT BY WRITTEN CONSENT OF PROPAK.

GENERAL SPECIFICATIONS

CLASS	TYPICAL SERVICE	TEMP. RANGE (°C)	PRESS. RATING (ANSI)
A	SWEET HYDROCARBON, PROPANE REFRIGERANT, FUEL GAS AND FLARE GAS	−28.8°C TO 260°C	150 # RF
B	SWEET HYDROCARBON, PROPANE REFRIGERANT, FUEL GAS AND FLARE GAS	−28.8°C TO 260°C	300 # RF
C	SWEET HYDROCARBON, PROPANE REFRIGERANT, FUEL GAS AND FLARE GAS	−28.8°C TO 260°C	600 # RF
H	COMPRESSED AIR AND UTILITY WATER	0°C TO 38°C	150 # RF
J	DRAIN SYSTEM PIPING	5°C TO 95°C	150 # RF
K	GLYCOL	1.21 MPa @ 177°C	150 # RF TO 1500 # RF
AS	SOUR HYDROCARBON, RICH AMINE AND SOUR WATER	−28.8°C TO 260°C	150 # RF
BS	SOUR HYDROCARBON, RICH AMINE AND SOUR WATER	−28.8°C TO 260°C	300 # RF
CS	SOUR HYDROCARBON, RICH AMINE AND SOUR WATER	−28.8°C TO 260°C	600 # RF
AL	SWEET HYDROCARBON, PROPANE REFRIGERANT	−45.5°C TO 66°C	150 # RF
BL	SWEET HYDROCARBON, PROPANE REFRIGERANT	−45.5°C TO 66°C	300 # RF
CL	SWEET HYDROCARBON, PROPANE REFRIGERANT	−45.5°C TO 66°C	600 # RF
AC	SWEET HYDROCARBON	−184°C TO 66°C	150 # RF
BC	SWEET HYDROCARBON	−184°C TO 66°C	300 # RF
CC	SWEET HYDROCARBON	−184°C TO 66°C	600 # RF

GENERAL NOTES (ABBREVIATIONS)

AC – AIR CLOSES
AO – AIR OPENS
AVT – AUTOVENT TRAP
BD – BLOWDOWN
BF – BLIND FLANGE
CBD – CONTINUOUS BD
CD – CLOSED DRAIN
CO – CHAIN OPERATED
CSC – CAR SEAL CLOSED
CSO – CAR SEAL OPEN
DC – DRAIN CONNECTION
EBD – EMERGENCY BD
ESD – EMERGENCY SHUTDOWN
ET – ELECTRICAL HEAT TRACE
FO – FAIL OPEN
FC – FAIL CLOSED
FP – FULL PORT
GT – GLYCOL HEAT TRACE
HH – HAND HOLE
HC – HOSE CONNECTION
L – LOW
LC – LOCK CLOSED
LO – LOCK OPEN
ML – MANUAL LOADING
MW – MANWAY
NC – NORMALLY CLOSED
NE – NORMALLY ENERGIZED UNDER OPER. COND.
NO – NORMALLY OPEN
ND – NORMALLY DE–ENERGIZED UNDER OPER. COND.
PC – PISTON CHECK VALVE
PO – PUMPOUT
PP – PERSONNEL PROTECTION
QO – QUICK OPENING
SC – SAMPLE CONNECTION
SO – STEAM OUT
SP – SET POINT
ST – STEAM HEAT TRACE
UG – UNDERGROUND
VB – VACUUM BREAKER
VFD – VARIABLE FREQUENCY DRIVE
WC – WATER COLUMN

COMMODITY (ABBREVIATIONS)

AG – ACID GAS
AGF – ACID GAS FLARE
AMD – AMINE DRAIN
AV – ATMOSPHERIC VENTS
BD – BLOWDOWN
C – CAUSTIC
CCD – CLOSED CRYOGENIC DRAIN
CHD – CLOSED HYDROCARBON DRAIN
CSD – CLOSED SOUR DRAIN
CV – CRYOGENIC VENT
CWD – CLOSED WATER DRAIN
DR – DRAIN (ATMOSPHERIC)
EQL – EQUALIZING
FG – FUEL GAS
FL – FLARE
FO – FUEL OIL
FW – FIRE WATER
GD – GLYCOL DRAIN
GL – GLYCOL
HC – HIGH PRESSURE STEAM CONDENSATE
HCL – HYDROCARBON LIQUIDS
HCV – HYDROCARBON VAPOUR
HM – HEAT MEDIUM
HPF – HIGH PRESSURE FLARE
HS – HIGH PRESSURE STEAM
I/A – INSTRUMENT AIR
I/G – INSTRUMENT GAS
IS – INSTRUMENT SUPPLY
JW – JACKET WATER
K – CHEMICALS
LAM – LEAN AMINE
LC – LOW PRESSURE STEAM CONDENSATE
LO – LUBE OIL
LOD – LUBE OIL DRAIN
LPF – LOW PRESSURE FLARE
LPG – LOW PRESSURE GAS
LS – LOW PRESSURE STEAM
MC – MEDIUM PRESSURE STEAM CONDENSATE
MS – MEDIUM PRESSURE STEAM
P – PROCESS GAS/LIQUID
PDW – PRODUCED WATER
POD – PACKING OIL DRAIN/VENT
POW – POTABLE WATER
PS – SOUR PROCESS GAS
PSW – SOUR PROCESS WATER
PW – PROCESS WATER
RAM – RICH AMINE
RLRV – REFRIG. LIQUID, REFRIG. VAPOUR
ROD – REFRIG. OIL DRAIN
SO – SEAL OIL
SOD – SEAL OIL DRAIN
UW – UTILITY WATER

TUBING SIZES

METRIC O.D (mm)	IMP O.D. (INCH.)
3	1/8"
6	1/4"
9	3/8"
13	1/2"
19	3/4"
25	1"

PIPE SIZES

IMP NPS (INCH.)	METRIC O.D. (mm)	METRIC DIN (mm)
1/4"	14	8
3/8"	17	10
1/2"	21	15
3/4"	27	20
1"	33	25
1–1/2"	48	40
2"	60	50
3"	89	80
4"	114	100
6"	168	150
8"	219	200
10"	273	250
12"	324	300
14"	356	350
16"	406	400
18"	457	450
20"	508	500
24"	610	600
36"	914	900
42"	1067	1050

NOTES:
NPS – NOMINAL PIPE SIZE

TYPICAL PIPE FLAGS

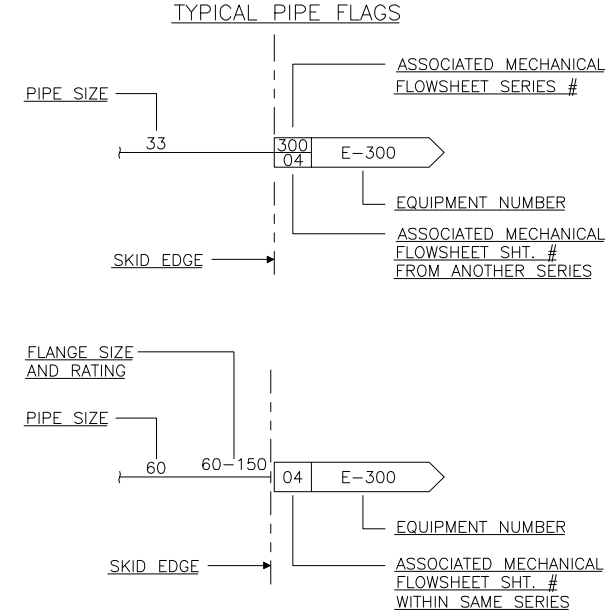

TYPICAL PIPE IDENTIFICATION

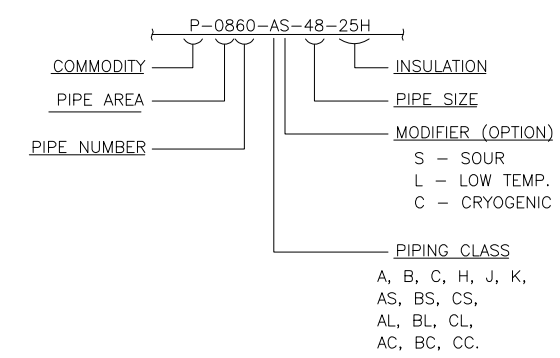

TYPICAL VALVE IDENTIFICATION

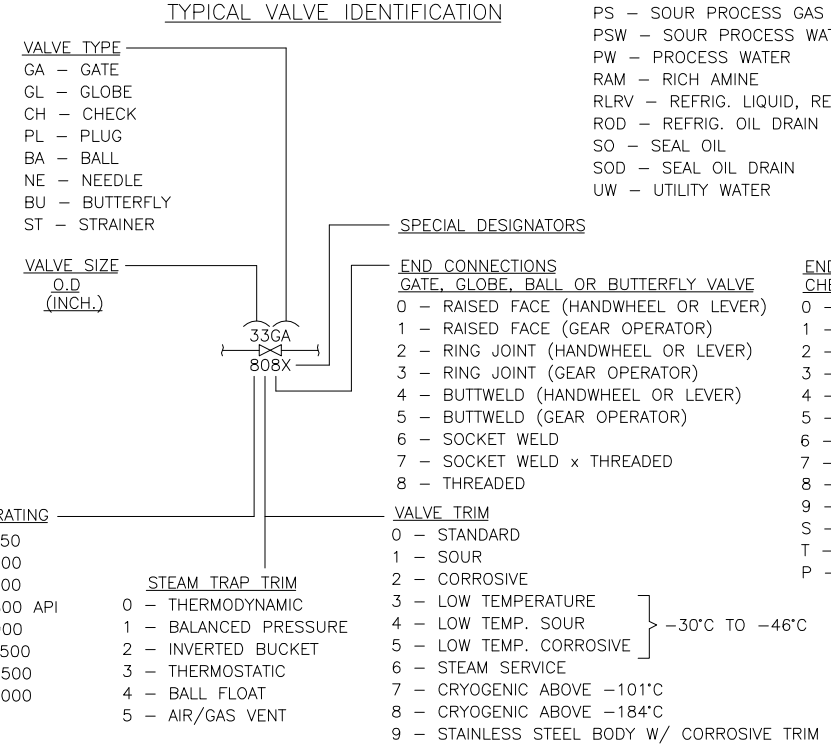

TYPICAL EQUIPMENT IDENTIFICATION

TAG No:	T–820
DESCRIPTION:	DEETHANIZER
MAKE AND MODEL:	...
DIMENSIONS:	...mm O.D. x ...mm S/S
DESIGN PRESSURE @ DESIGN TEMP., CORROS. ALLOWANCE:	... kPa @ ... °C, ...mm C.A.
GAS FLOW RATES:	... m3/d
LIQUID FLOW RATES:	... m3/h
DUTIES:	... kW
MOTOR POWER:	... kW @ V/ø/Hz
STRESS RELIEVING AND X–RAY:	S.R.: YES/NO, X–RAY: FULL/100%/SPOT

GENERAL NOTES	GENERAL NOTES	1	ISSUED FOR CONSTRUCTION	MAF	10/10/20	RHH	RHH
DATE: 2010/10/19 02:10 PM J:\JOBS10\101531\20–DRAWINGS\FLW\MFS–101531–100–02.DWG valeryk		No.	REVISION	BY	DATE	CKD	ENG

APPROVED		DRAWN	
MECH./STRUCT.		BY	PSC
DATE		DATE	09/11/09
ELECTRICAL		CHECKED	
DATE		BY	D.LAW
PROJECT	D.LAW	DATE	09/11/09
DATE	09/11/09		
		SCALE	

PROPAK

STOCK REFRIGERATION UNIT – REF8B
LEGEND
MECHANICAL FLOWSHEET

DWG. No.: D–MFS–101531–100 SHT. 2 OF 6 REV. 1

PROPAK
440 East Lake Road,
Airdrie, Alberta
Canada T4A 2J8

THIS DRAWING AND THE DESIGN IT COVERS ARE CONFIDENTIAL AND THE PROPERTY OF PROPAK SYSTEMS LTD., AND SHALL NOT BE DISCLOSED TO OTHERS OR REPRODUCED IN ANY MANNER OR USED FOR ANY PURPOSE WHATSOEVER EXCEPT BY WRITTEN CONSENT OF PROPAK.

DATE: 2010/10/19 02:11 PM J:\JOB510\101531\20-DRAWINGS\FLW\MFS-101531-100-03.DWG vaderyk

GENERAL NOTES

1. TOP TS OUTLET ON E-615 REQUIRED.
2. MINIMIZE THREADED CONNECTIONS ON
3. INSTALL FLOWMETER VERTICALLY WITH FLOW UP THRU EQUALIZING LINE.
4. c/w FROST SHELLD.

TO FACILITATE REMOVAL OF THE INSTRUMENT.
METER WITH UNIONS.

No.	REVISION	BY	DATE	CKD	ENG
1	ISSUED FOR CONSTRUCTION	MAF	10/10/20	RHH	RHH

APPROVED			
MECH./STRUCT.		BY	PSC
DATE		DATE	09/11/09
ELECTRICAL		CHECKED	
DATE		BY	D.LAW
PROJECT	D.LAW	DATE	09/11/09
DATE	09/11/09	SCALE	

DRAWN: PROPAK

PROPAK
440 East Lake Road,
Airdrie, Alberta
Canada T4A 2J8

STOCK REFRIGERATION UNIT - REF8B
MYCOM 8B REFRIGERATION PLANT
MECHANICAL FLOWSHEET

DWG. No.: D-MFS-101531-100 SHT. 3 OF 6 REV. 1

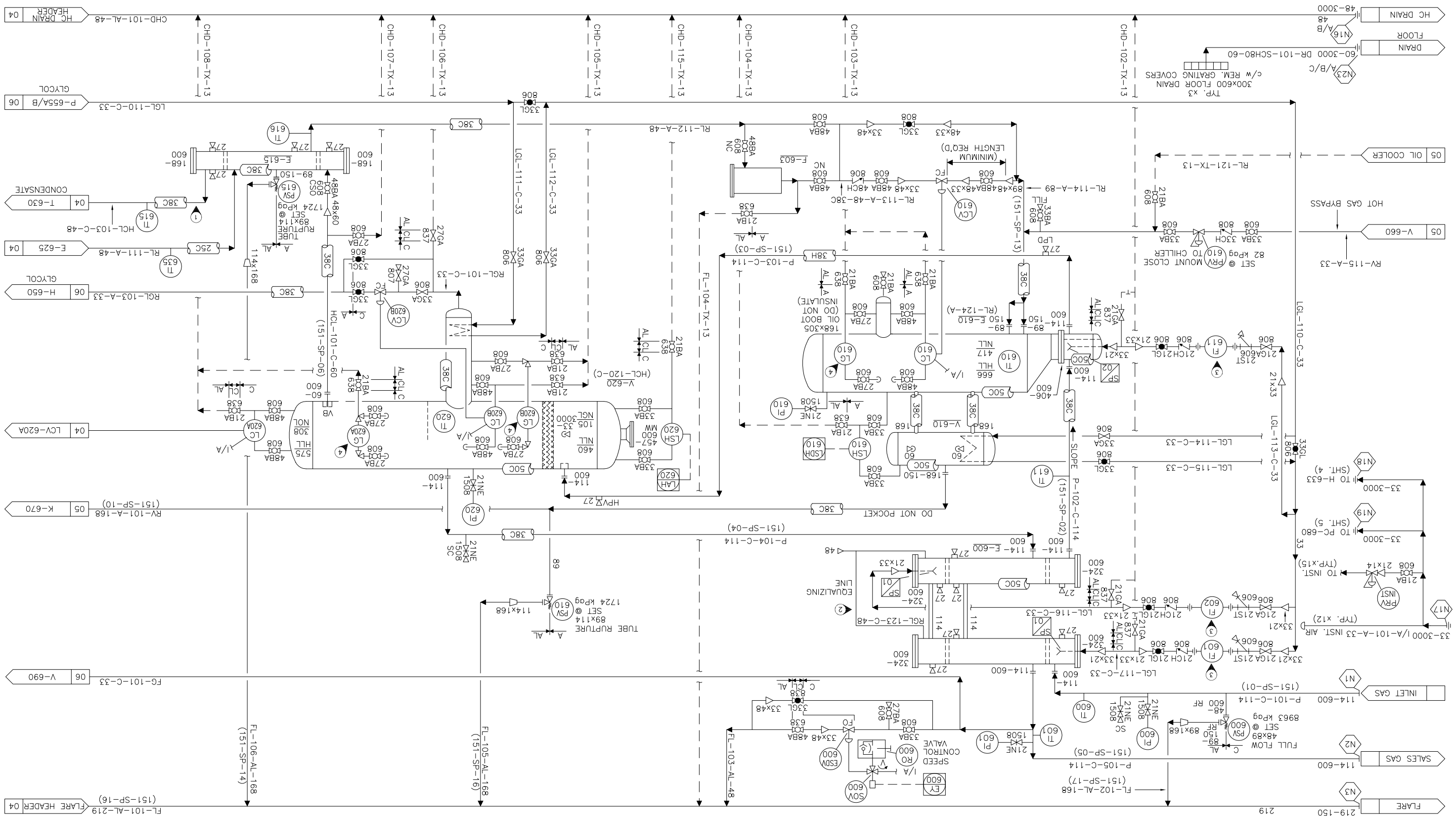

E-600	E-610	V-610	F-603	V-620	E-615
GAS/GAS EXCHANGER	GAS CHILLER	PROPANE SUCTION SCRUBBER	REFRIGERANT FILTER/DRYER	LOW TEMP. SEPARATOR	REFRIGERANT SUBCOOLER
324mm O.D. x 1218mm TS/TS x 2 PASS	406mm O.D. x 762mm O.D. x 609mm FOF/S	610mm O.D. x 304mm S/S	SPORLAN MODEL C-19212-P	914mm O.D. x 457mm S/S	168mm O.D. x 609mm TS/TS
TS : 8963 kPag @ -28.8°C/65.5°C 1.59mm C.A.	TS : 8963 kPag @ -28.8°C/65.5°C 1.59mm C.A.	1724 kPag @ -28.8°C/65.5°C 1.59mm C.A.	c/w FOUR(4) RC-4864 CORES	8963 kPag @ -28.8°C/65.5°C 1.59mm C.A.	TS: 8963 kPag @ -28.8°C/65.5°C 1.59mm C.A.
SS : 8963 kPag @ -28.8°C/65.5°C 1.59mm C.A.	SS : 1724 kPag @ -28.8°C/65.5°C 1.59mm C.A.	(111_02)	(111_61)	c/w 324mm O.D. x 457mm LG BOOT	SS: 1724 kPag @ -28.8°C/65.5°C 1.59mm C.A.
(111_01)	(111_02)			(111_06)	(111_03)

THIS DRAWING AND THE DESIGN IT COVERS ARE CONFIDENTIAL AND THE PROPERTY OF PROPAK SYSTEMS LTD., AND SHALL NOT BE DISCLOSED TO OTHERS OR REPRODUCED IN ANY MANNER OR USED FOR ANY PURPOSE WHATSOEVER EXCEPT BY WRITTEN CONSENT OF PROPAK.

DATE: 2012/09/07 09:26 AM J:\JOBS10\101531\20-DRAWINGS\FLW\MFS-101531-100-04.DWG epeng

GENERAL NOTES

1. ON SKID SPOOLING BY PROPAK.
2. OFF SKID SPOOLING BY OTHERS.
3. ALLOW 10 PIPE DIA. UP AND DOWNSTREAM OF FM-630

GENERAL NOTES

4. OTHERS TO REGULATE NITROGEN TO LESS THAN 200 kPag, AND TO PROTECT TO 200 kPag.
5. INSTALLER TO ENSURE ADEQUATE DRAINAGE TO PREVENT LIQUID POOLING UNDER COOLER.

No.	REVISION	BY	DATE	CKD	ENG
1	ISSUED FOR CONSTRUCTION	MAF	10/10/20	RHH	RHH
2	GENERAL REVISIONS	EMP	12/09/07	RHH	RHH

MECH./STRUCT.	BY	PSC	
DATE	DATE	09/11/09	
ELECTRICAL	BY	D.LAW	
DATE	DATE	09/11/09	
PROJECT	D.LAW	DATE	09/11/09
DATE	09/11/09		

APPROVED

DRAWN	PROPAK
CHECKED	STOCK REFRIGERATION UNIT - REFBB MYCOM 8B REFRIGERATION PLANT MECHANICAL FLOWSHEET
SCALE	

DWG. No.: D-MFS-101531-100 SHT. 4 OF 6 REV. 2

PROPAK
440 East Lake Road,
Airdrie, Alberta
Canada T4A 2J8

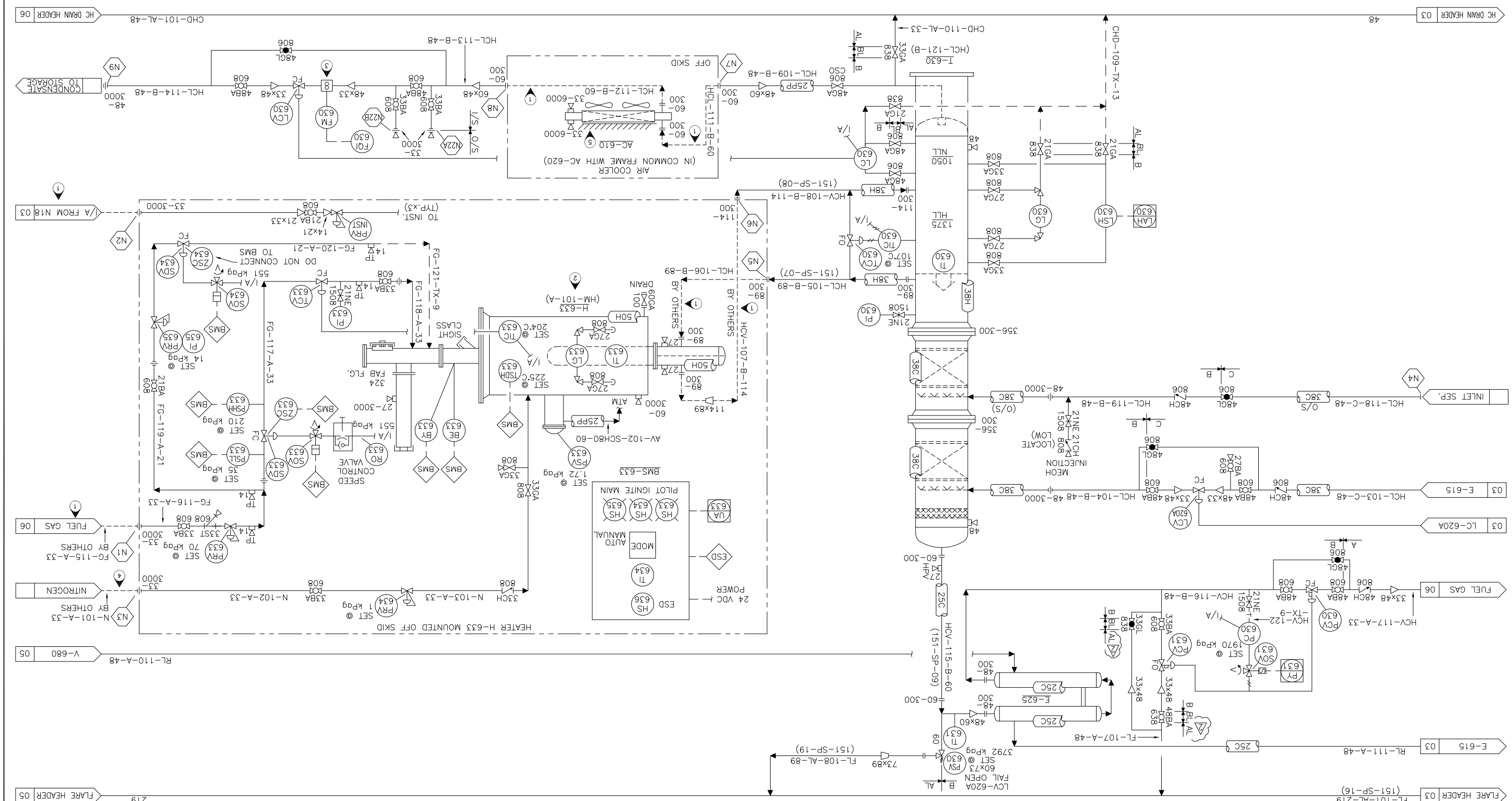

THIS DRAWING AND THE DESIGN IT COVERS ARE CONFIDENTIAL AND THE PROPERTY OF PROPAK SYSTEMS LTD., AND SHALL NOT BE DISCLOSED TO OTHERS OR REPRODUCED IN ANY MANNER OR USED FOR ANY PURPOSE WHATSOEVER EXCEPT BY WRITTEN CONSENT OF PROPAK.

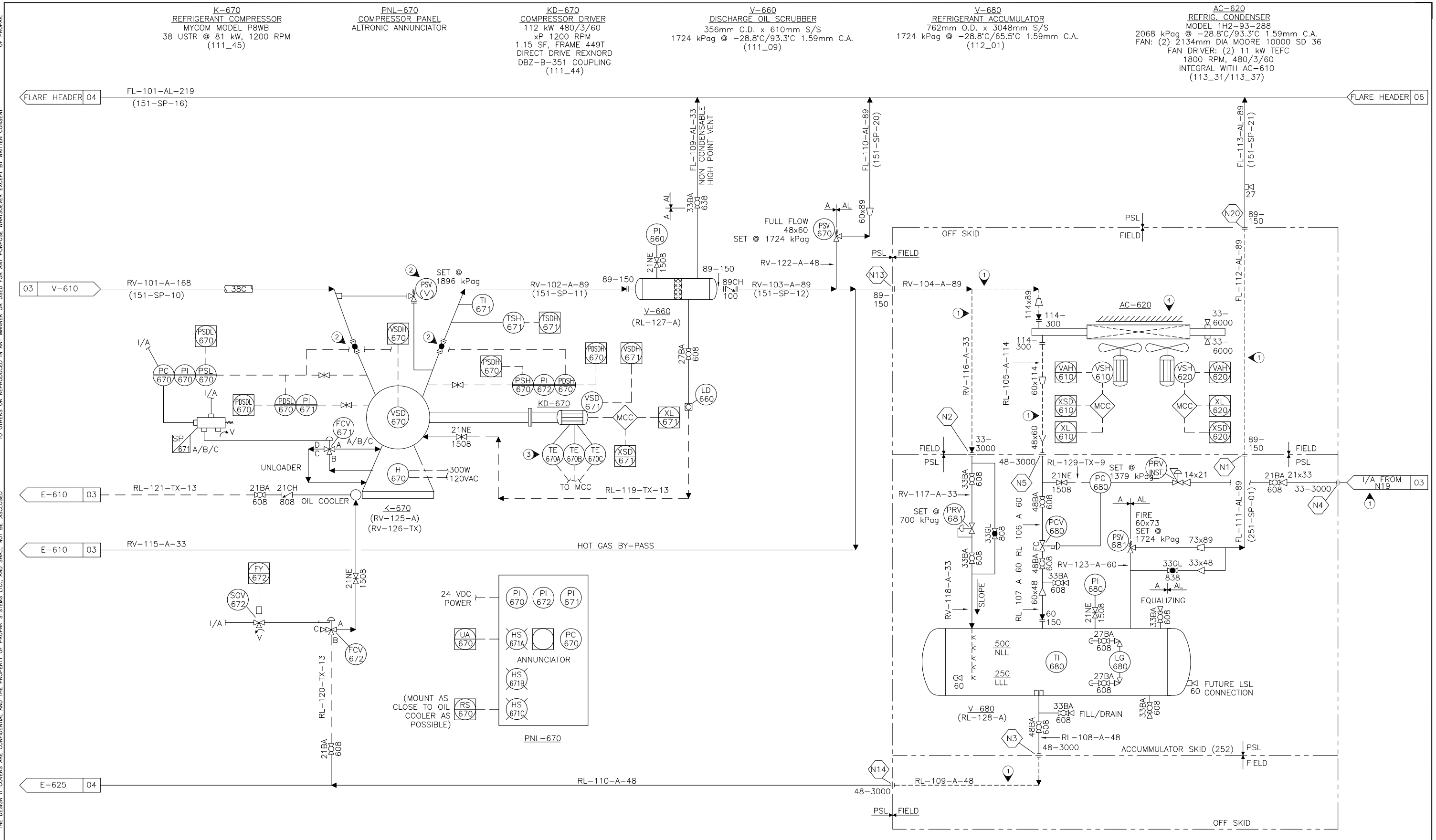

1. ON SKID SPOOLING BY PROPAK, OFF SKID SPOOLING BY OTHERS.							
2. SUPPLIED WITH COMPRESSOR.							
3. SUPPLIED WITH MOTOR.							
4. INSTALLER TO ENSURE ADEQUATE DRAINAGE TO PREVENT LIQUID POOLING UNDER COOLER.							
GENERAL NOTES	GENERAL NOTES	1	ISSUED FOR CONSTRUCTION	MAF	10/10/20	RHH	RHH
DATE: 2010/10/19 02:11 PM J:\JOBS10\101531\20-DRAWINGS\FLW\MFS-101531-100-05.DWG valeryk		No.	REVISION	BY	DATE	CKD	ENG

APPROVED		DRAWN	
MECH./STRUCT.		BY	PSC
DATE		DATE	09/11/09
ELECTRICAL		CHECKED	
DATE		BY	D.LAW
PROJECT	D.LAW	DATE	09/11/09
DATE	09/11/09		
		SCALE	

PROPAK

STOCK REFRIGERATION UNIT – REF8B
MYCOM 8B REFRIGERATION PLANT
MECHANICAL FLOWSHEET

DWG. No.: D-MFS-101531-100 SHT. 5 OF 6 REV. 1

PROPAK
440 East Lake Road,
Airdrie, Alberta
Canada T4A 2J8

THIS DRAWING AND THE DESIGN IT COVERS ARE CONFIDENTIAL AND THE PROPERTY OF PROPAK SYSTEMS LTD., AND SHALL NOT BE DISCLOSED TO OTHERS OR REPRODUCED IN ANY MANNER OR USED FOR ANY PURPOSE WHATSOEVER EXCEPT BY WRITTEN CONSENT OF PROPAK.

V-640 GLYCOL FLASH TANK
324mm O.D. x 2286mm S/S
1724 kPag @ -28.8°C/93.3°C 1.59mm C.A.
(111_15)

F-601 GLYCOL FILTER
WEIE 3000L2
20685 kPag @ -28.8°C/121.1°C
CAP. 5 L/min @ 10 MICRON
(111_61)

F-602 GLYCOL CARBON FILTER
PSL STD
324mm O.D. x 780mm EOP/EOP
1000 kPag @ -28.8°C/93.3°C 1.59mm C.A.
c/w ONE(1) PECO 1120C ELEMENT
(111_14)

P-655A/P-655B GLYCOL INJECTION PUMPS
NATIONAL OILWELL 5S-2M
5.7 L/min. @ 8274 kPag
c/w 1.5 kW 460/3/60 xP MOTOR
(111_61)

H-650 GLYCOL REGENERATOR
MODIFIED PROPAK 100 kW UNIT
SHELL: 610mm O.D. x 3010mm END/FOF
ATM. @ -28.8°C/204.4°C 1.59mm C.A.
SURGE TANK: 610mm DIA. x 2388mm LG.
STILL COLUMN: 324mm O.D. x 2000mm
(111_11)

BMS-650 BURNER PANEL MANAGEMENT
PROFIRE 1100
CSA B149.3 COMPLIANT

V-690 FUEL GAS SCRUBBER
324mm O.D. x 1524mm S/S
1724 kPag @ -28.8°C/65.5°C 1.59mm C.A.
(111_08)

H-400A/H-400B BUILDING HEATERS
RUFFNECK 15 kW
FX5-480360-15
480/3/60
c/w 0.19 kW xP FAN
(111_61)

EF-155A/B EXHAUST FANS
120/1/60
12 AIR CHANGES PER HOUR
CLASS 1 CIV 1

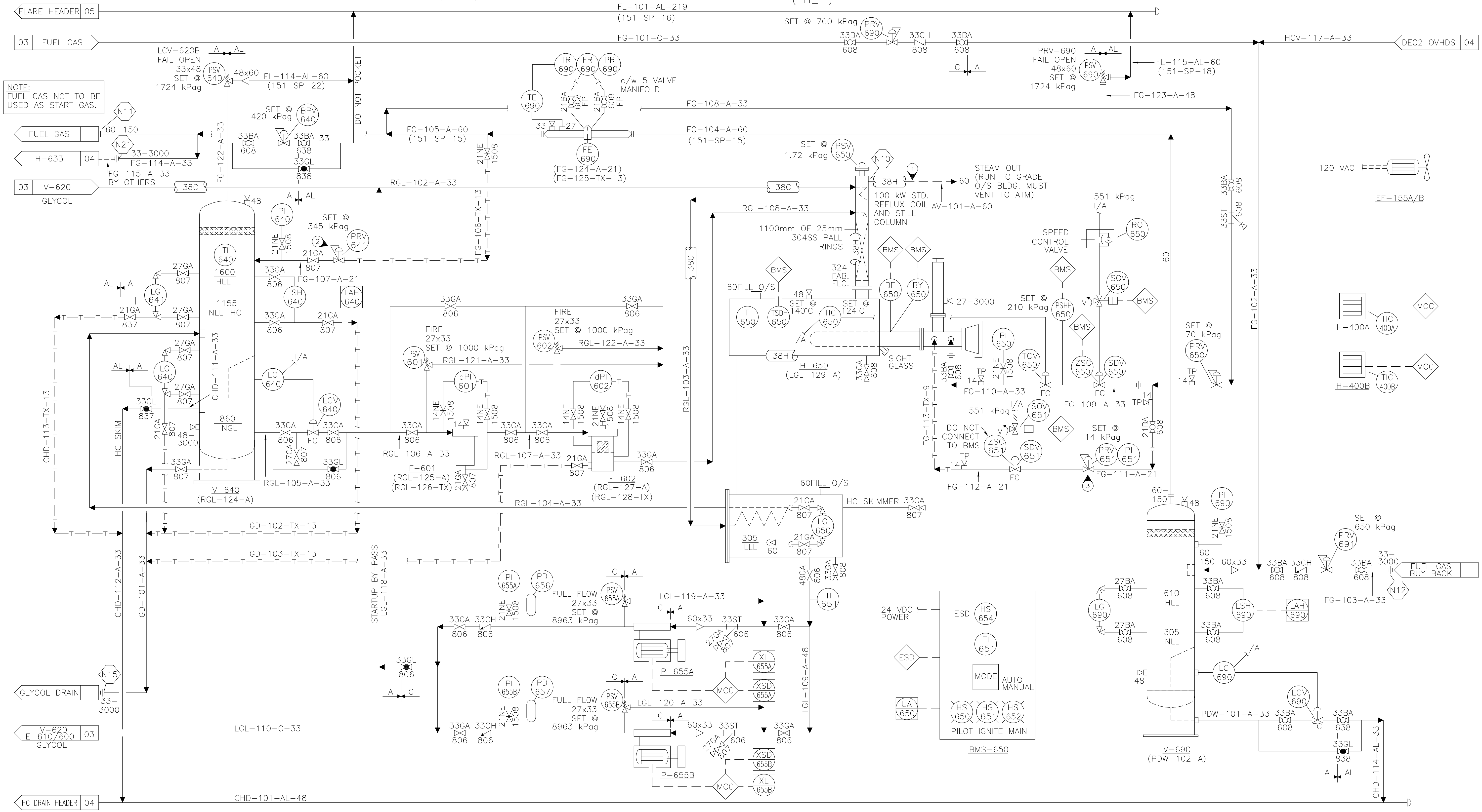

1. ON SKID SPOOLING BY PROPAK, OFF SKID SPOOLING BY OTHERS.	
2. TUBE VENT OUTSIDE: PROTECT O/S END WITH BUGSCREEN	
3. SEPARATELY TUBE VENT OUTSIDE: PROTECT O/S END WITH BUGSCREEN.	
GENERAL NOTES	GENERAL NOTES

No.	REVISION	BY	DATE	CKD	ENG
1	ISSUED FOR CONSTRUCTION	MAF	10/10/20	RHH	RHH

DATE: 2010/10/19 02:11 PM J:\JOBS10\101531\20-DRAWINGS\FLW\MFS-101531-100-06.DWG valeryk

APPROVED		DRAWN	
MECH./STRUCT.		BY	PSC
DATE		DATE	09/11/09
ELECTRICAL		CHECKED	
DATE		BY	D.LAW
PROJECT	D.LAW	DATE	09/11/09
DATE	09/11/09	SCALE	

PROPAK
STOCK REFRIGERATION UNIT - REF8B
MYCOM 8B REFRIGERATION PLANT
MECHANICAL FLOWSHEET

DWG. No.: D-MFS-101531-100 SHT. 6 OF 6 REV. 1

PROPAK
440 East Lake Road,
Airdrie, Alberta
Canada T4A 2J8

THIS DRAWING AND THE DESIGN IT COVERS ARE CONFIDENTIAL AND THE PROPERTY OF PROPAK SYSTEMS LTD., AND SHALL NOT BE DISCLOSED TO OTHERS OR REPRODUCED IN ANY MANNER OR USED FOR ANY PURPOSE WHATSOEVER EXCEPT BY WRITTEN CONSENT OF PROPAK.

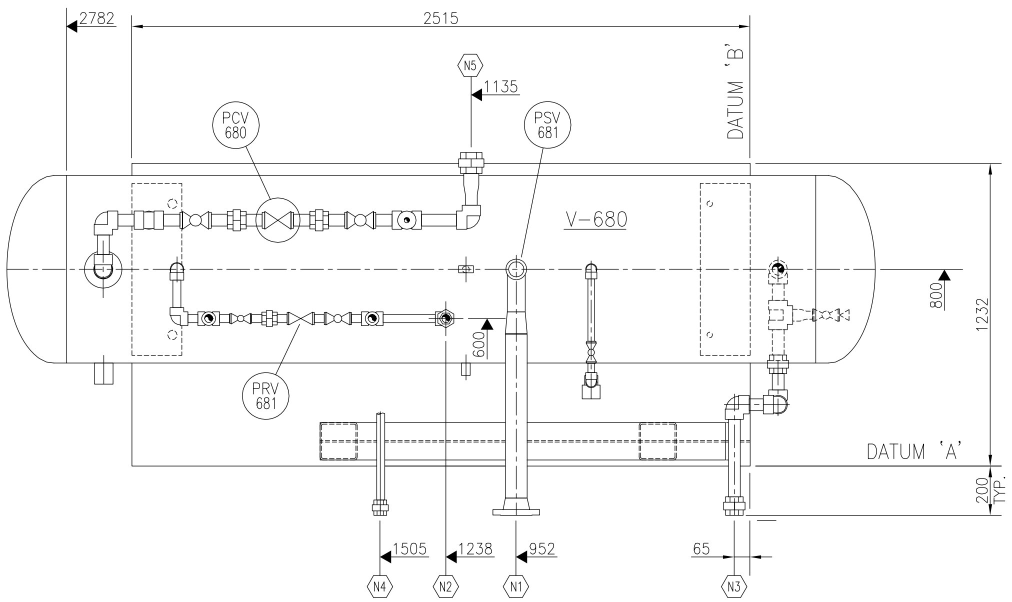

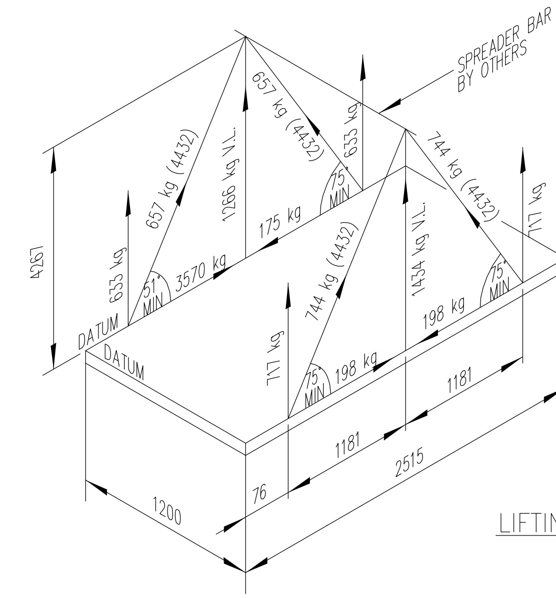

LIFTING DIAGRAM

NOTES:

1. WEIGHTS SHOWN INCLUDE 50% EXCESS FOR DYNAMIC LOADING
2. APPROX. SHIPPING WEIGHT = 1800 KG

CENTER OF GRAVITY
X = 1255 mm
Y = 652 mm
Z = 760 mm

NOZZLE SCHEDULE					
MK	SIZE	RATING	FACING	SERVICE	℄ ELEVATION
N1	3 NPS	150#	RFWN	FLARE	3055
N2	1 NPS	3000#	NPT	HOT GAS BY-PASS	SPEC.
N3	1 1/2 NPS	3000#	NPT	LIQUID REFRIGERANT OUTLET	2632
N4	1 NPS	3000#	NPT	INSTRUMENT AIR	3011
N5	1 1/2 NPS	3000#	NPT	LIQUID REFRIGERANT INLET	1509

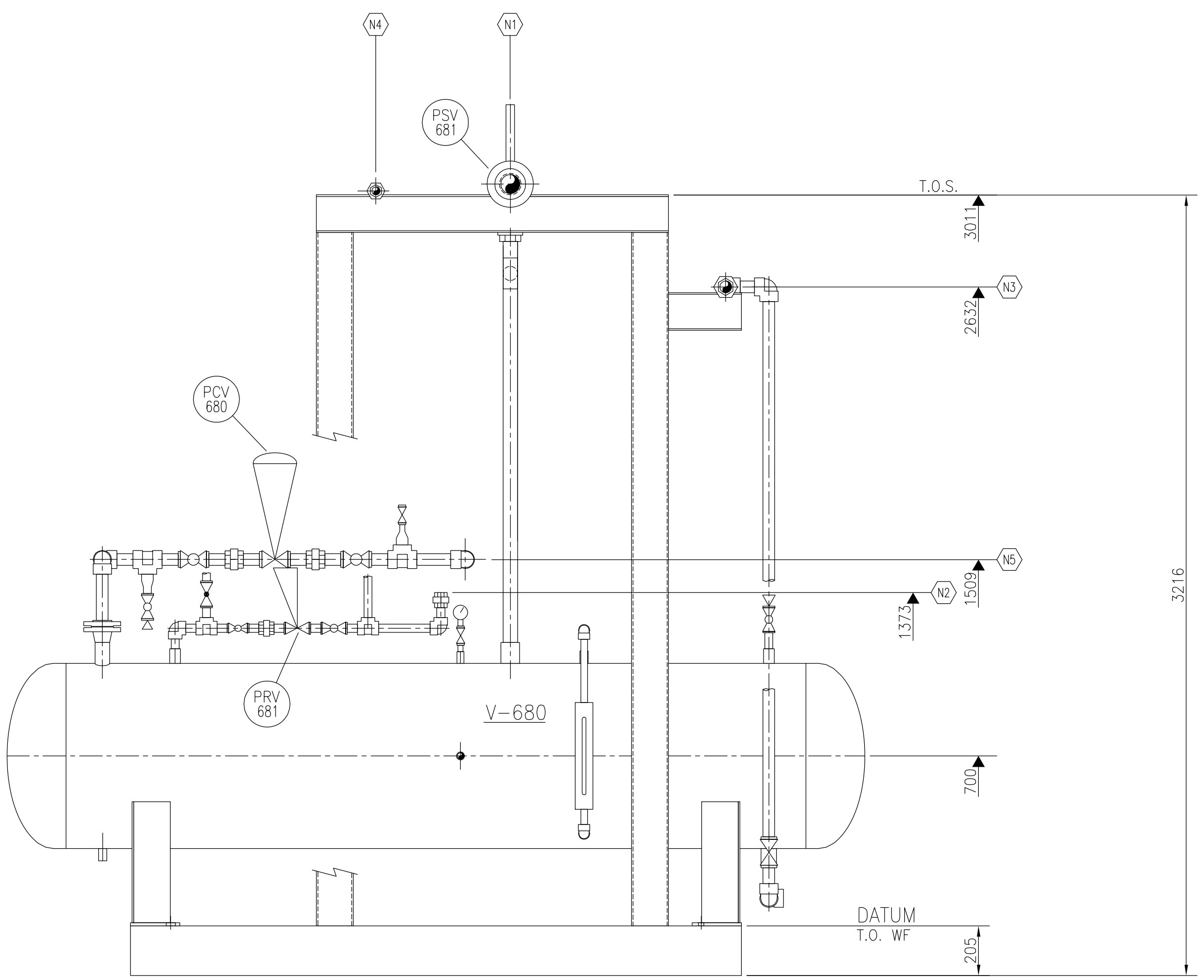

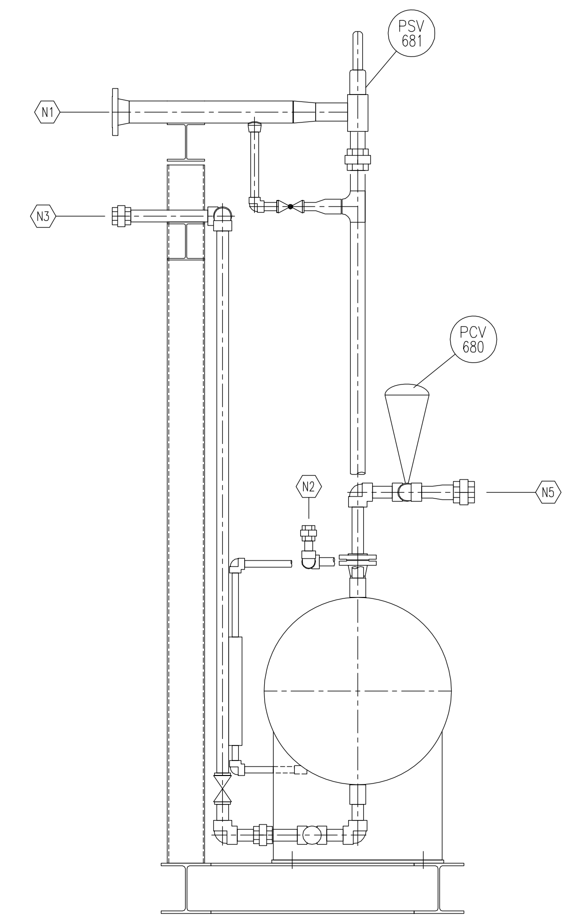

DOC # : PSL-XXX-XXX-XXX-XXXXXX-XX

GENERAL NOTES	GENERAL NOTES	1	ISSUED FOR CONSTRUCTION	I.LEE	11/01/24		
DATE: 2011/01/24 09:42 AM J:\JOBS10\101531\20-DRAWINGS\FAB\ASY\ASY-101531-252.DWG isabellal		No.	REVISION	BY	DATE	CKD	ENG

APPROVED		DRAWN	
MECH./STRUCT.		BY	PSC
DATE		DATE	04/04/13
ELECTRICAL		CHECKED	
DATE		BY	PSC
PROJECT		DATE	04/04/13
DATE	11/01/24	SCALE	1:15

PROPAK

STOCK REFRIGERATION UNIT – REF8B
REFRIGERANT ACCUMULATOR SKID
PIPING LAYOUT – OPTION 'A'

DWG. No.: D-ASY-101531-252 REV. 1

PROPAK
440 East Lake Road,
Airdrie, Alberta
Canada T4A 2J8

THIS DRAWING AND THE DESIGN IT COVERS ARE CONFIDENTIAL AND THE PROPERTY OF PROPAK SYSTEMS LTD., AND SHALL NOT BE DISCLOSED TO OTHERS OR REPRODUCED IN ANY MANNER OR USED FOR ANY PURPOSE WHATSOEVER EXCEPT BY WRITTEN CONSENT OF PROPAK.

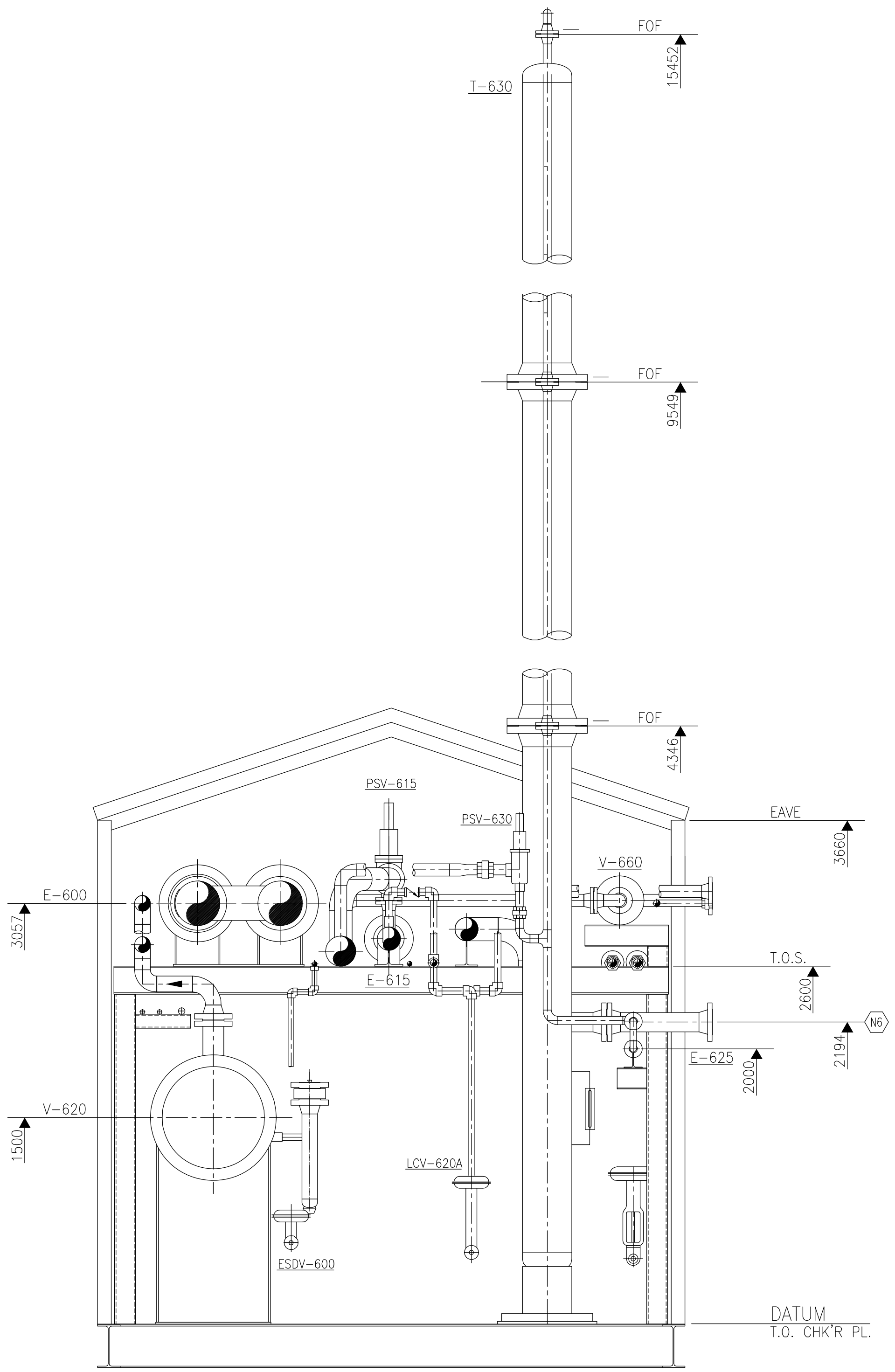

SECTION 'C-C'

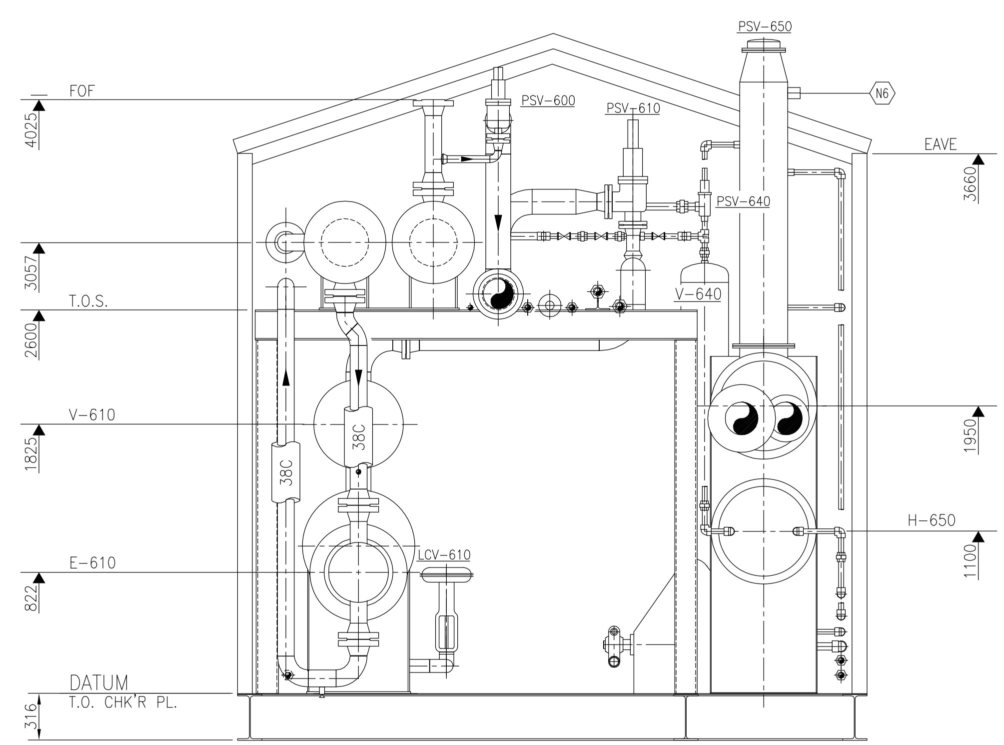

SECTION 'D-D'

GENERAL NOTES	GENERAL NOTES	No.	REVISION	BY	DATE	CKD	ENG
–							
		1	ISSUED FOR CONSTRUCTION	I.LEE	11/01/24		

DATE: 2011/01/24 09:41 AM J:\JOBS10\101531\20-DRAWINGS\FAB\ASY\ASY-101531-152.DWG isabellal

APPROVED		DRAWN	
MECH./STRUCT.		BY	PSC
DATE		DATE	04/09/17
ELECTRICAL		CHECKED	
DATE		BY	PSC
PROJECT		DATE	04/09/17
DATE	11/01/24	SCALE	1:25

PROPAK

STOCK REFRIGERATION UNIT – REF8B
REFRIGERATION SKID
PIPING LAYOUT

DWG. No.: D-ASY-101531-152 SHEET 4 OF 4 REV. 1

PROPAK
440 East Lake Road,
Airdrie, Alberta
Canada T4A 2J8

THIS DRAWING AND THE DESIGN IT COVERS ARE CONFIDENTIAL AND THE PROPERTY OF PROPAK SYSTEMS LTD., AND SHALL NOT BE DISCLOSED TO OTHERS OR REPRODUCED IN ANY MANNER OR USED FOR ANY PURPOSE WHATSOEVER EXCEPT BY WRITTEN CONSENT OF PROPAK.

GENERAL NOTES	GENERAL NOTES
–	

DATE: 2011/01/24 09:41 AM J:\JOBS10\101531\20-DRAWINGS\FAB\ASY\ASY-101531-152.DWG isabellgl

No.	REVISION	BY	DATE	CKD	ENG
1	ISSUED FOR CONSTRUCTION	LLEE	11/01/24		

MECH./STRUCT.		BY	PSC
DATE		DATE	04/09/17
ELECTRICAL		CHECKED	
DATE		BY	PSC
PROJECT		DATE	04/09/17
DATE	11/01/24		

APPROVED

DRAWN

SCALE 1:25

DWG. No.: D-ASY-101531-152 SHEET 3 OF 4 REV. 1

PROPAK

440 East Lake Road,
Airdrie, Alberta
Canada T4A 2J8

STOCK REFRIGERATION UNIT – REFBB
REFRIGERATION SKID
PIPING LAYOUT

PROPAK

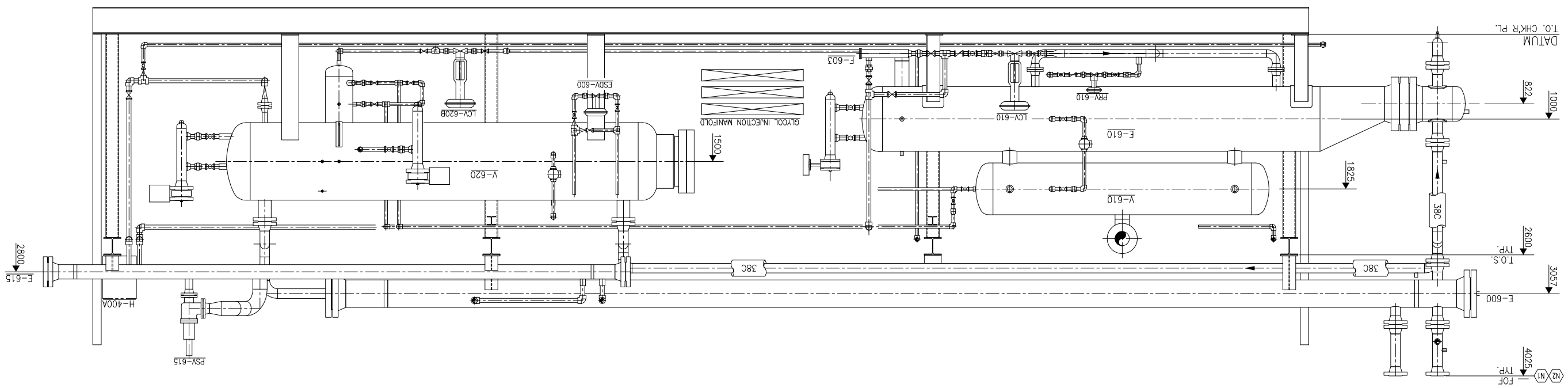

THE DESIGN IT COVERS ARE CONFIDENTIAL AND THE PROPERTY OF PROPAK SYSTEMS LTD., AND SHALL NOT BE DISCLOSED TO OTHERS OR REPRODUCED IN ANY MANNER OR USED FOR ANY PURPOSE WHATSOEVER EXCEPT BY WRITTEN CONSENT OF PROPAK.

SHIPPING DATA

ITEM	APPROX WT	DIMENSIONS (L.W.H)
SKID ASSEMBLY	51850 kg	16950 x 4267 x 4790
T-710	3500 kg	356 O/D x 14583 S/S
H-601 STILL COL	--- kg	---- x --- x ---
H-601 STACK	--- kg	---- x --- x ---
COMPRESSOR	2005 kg	
MOTOR	1110 kg	

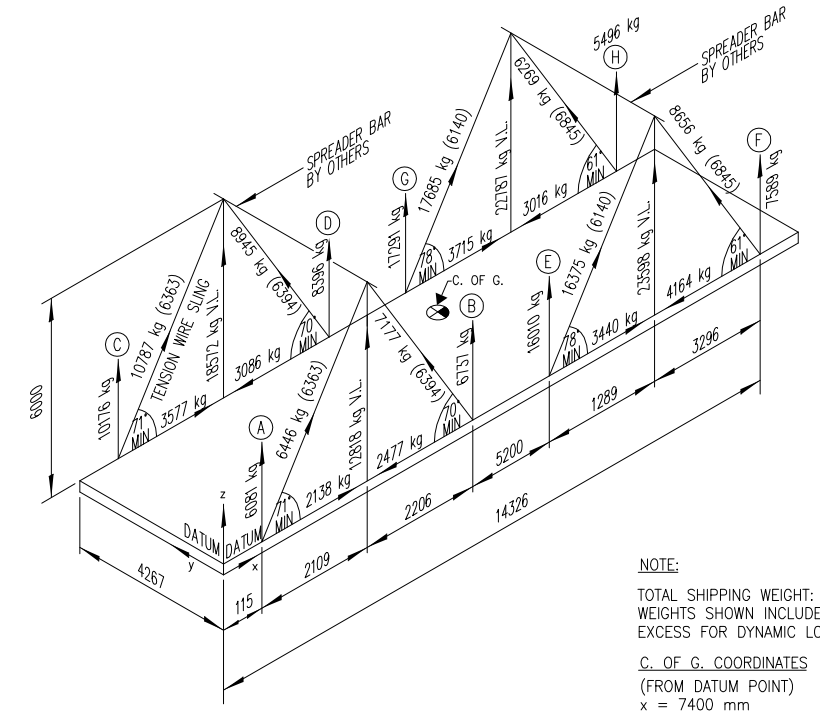

NOTE:

TOTAL SHIPPING WEIGHT: 51850 Kg
WEIGHTS SHOWN INCLUDE 50%
EXCESS FOR DYNAMIC LOADING

C. OF G. COORDINATES
(FROM DATUM POINT)
x = 7400 mm
y = 2270 mm
z = 1300mm

LIFTING DIAGRAM
N. T. S

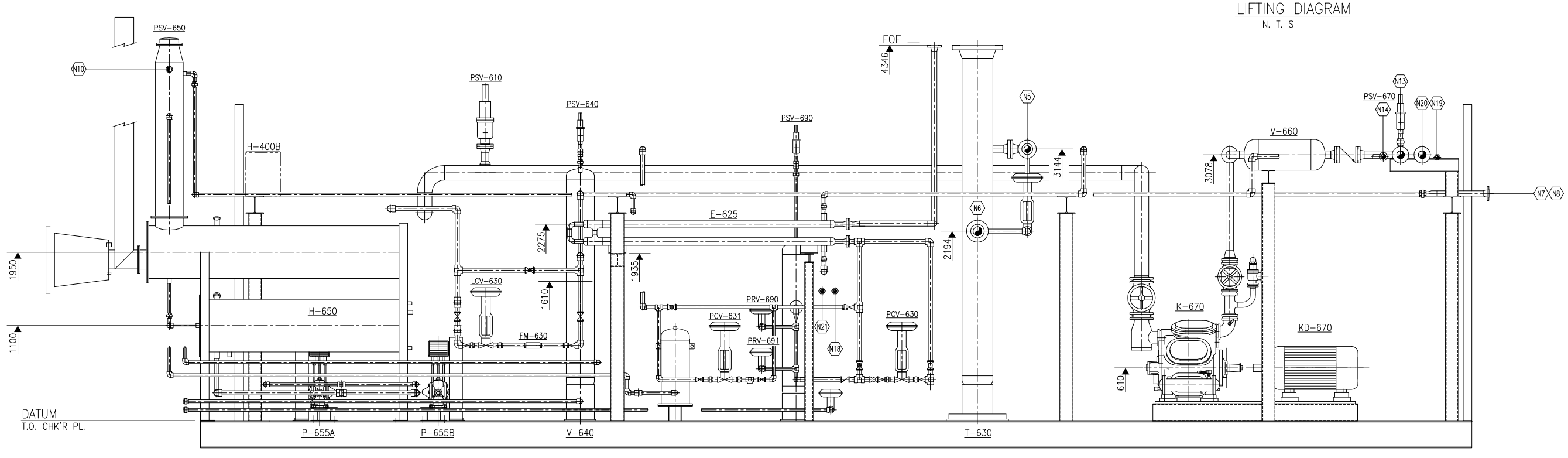

SECTION 'A-A'

No.	REVISION	BY	DATE	CKD	ENG
–					
1	ISSUED FOR CONSTRUCTION	I.LEE	11/01/24		

GENERAL NOTES

GENERAL NOTES

	APPROVED		DRAWN
MECH./STRUCT.		BY	PSC
DATE		DATE	04/09/17
ELECTRICAL			CHECKED
DATE		BY	PSC
PROJECT		DATE	04/09/17
DATE	11/01/24		
		SCALE	1:25

PROPAK

STOCK REFRIGERATION UNIT – REF8B
REFRIGERATION SKID
PIPING LAYOUT

DWG. No.: D-ASY-101531-152 SHEET 2 OF 4 REV. 1

PROPAK
440 East Lake Road,
Airdrie, Alberta
Canada T4A 2J8

THIS DRAWING AND
DATE: 2011/01/24 09:40 AM J:\JOBS10\101531\20-DRAWINGS\FAB\ASY\ASY-101531-152.DWG isabellal

THIS DRAWING AND THE DESIGN IT COVERS ARE CONFIDENTIAL AND THE PROPERTY OF PROPAK SYSTEMS LTD., AND SHALL NOT BE DISCLOSED TO OTHERS OR REPRODUCED IN ANY MANNER OR USED FOR ANY PURPOSE WHATSOEVER EXCEPT BY WRITTEN CONSENT OF PROPAK.

NOZZLE SCHEDULE					
MK	SIZE	RATING	FACING	SERVICE	℄ ELEVATION
N1	4 NPS	600#	RFWN	INLET GAS	4025 F.O.F.
N2	4 NPS	600#	RFWN	SALES GAS	4025 F.O.F.
N3	8 NPS	150#	RFWN	FLARE HEADER	2710
N4	1 1/2 NPS	3000#	UNION	HC LIQUID INLET (FROM INLET SEP.)	2724
N5	3 NPS	300#	RFWN	REBOILER FEED TO H-633	3144
N6	4 NPS	300#	RFWN	REBOILER RETURN FROM H-633	2194
N7	2 NPS	300#	RFWN	CONDENSATE TO AC-610	2630
N8	2 NPS	300#	RFWN	CONDENSATE FROM AC-610	2630
N9	1 1/2 NPS	3000#	UNION	CONDENSATE TO STORAGE	2624
N10	2 NPS	–	NPT	REBOILER STEAM OUTLET	4080
N11	2 NPS	150#	RFWN	FUEL GAS OUT	2630

	NOZZLE SCHEDULE					
	MK	SIZE	RATING	FACING	SERVICE	℄ ELEVATION
	N12	1 NPS	3000#	UNION	FUEL GAS BUY BACK	2617
	N13	3 NPS	150#	RFWN	REFRIG. VAPOUR TO AC-620	3078
	N14	1 1/2 NPS	3000#	UNION	REFRIG. LIQUID FROM V-680	3063
	N15	1 NPS	3000#	UNION	GLYCOL DRAIN	225
A/B	N16	1 1/2 NPS	3000#	UNION	HC DRAIN	125
	N17	1 NPS	3000#	UNION	INST. AIR INLET	2617
	N18	1 NPS	3000#	UNION	INST. AIR TO H-633	1500
	N19	1 NPS	3000#	UNION	INST. AIR TO PC-680	3056
	N20	3 NPS	150#	RFWN	FLARE FROM PSV-681	3078
	N21	1 NPS	3000#	UNION	FUEL GAS TO H-633	1500
A/B	N22	1 NPS	3000#	UNION	METER PROVER	SHOP TO LOCATE
A/B	N23	2 NPS	–	N/A	FLOOR DRAIN	– 190

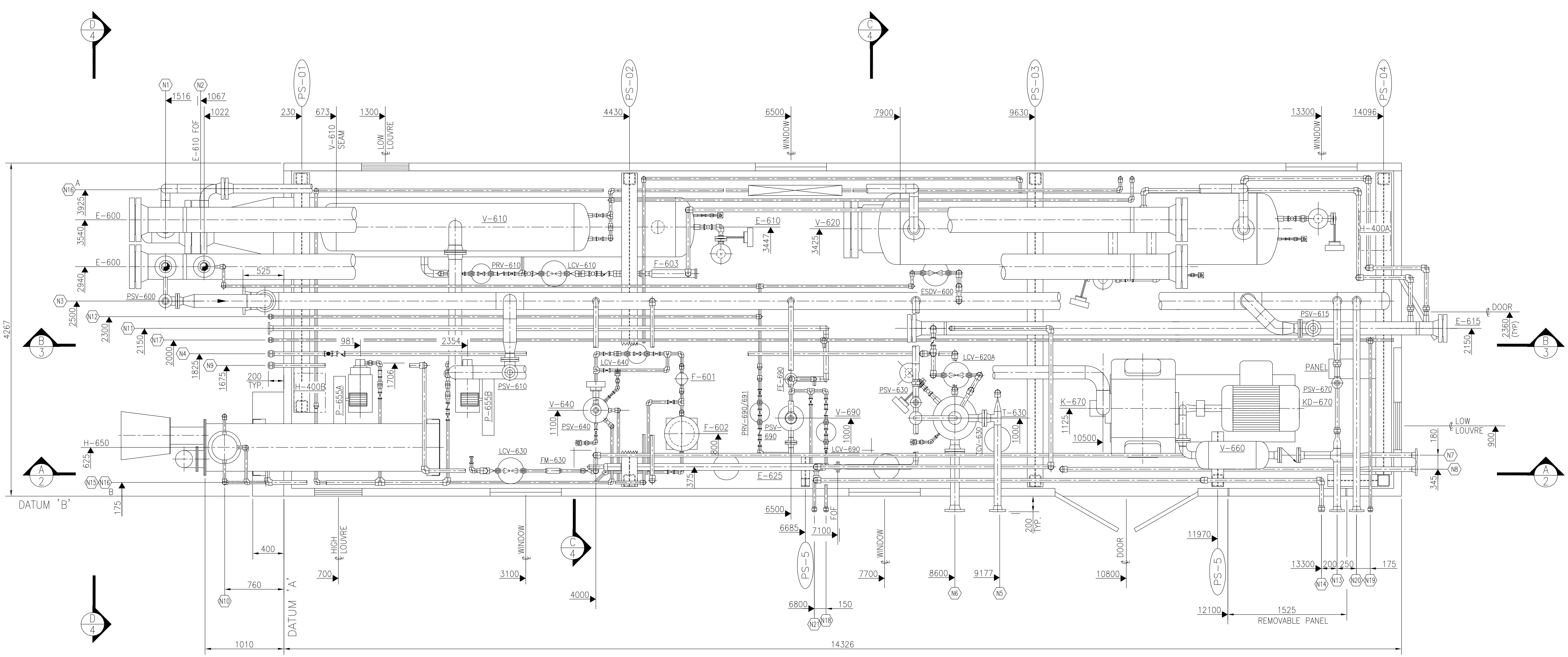

DOC # : PSL-XXX-XXX-XXX-XXXXXX-XX

GENERAL NOTES	GENERAL NOTES	No.	REVISION	BY	DATE	CKD	ENG
–							
		1	ISSUED FOR CONSTRUCTION	I.LEE	11/01/24		

DATE: 2011/01/24 09:40 AM J:\JOBS10\101531\20-DRAWINGS\FAB\ASY\ASY-101531-152.DWG isabellal

APPROVED		DRAWN	
MECH./STRUCT.		BY	PSC
DATE		DATE	04/09/17
ELECTRICAL		CHECKED	
DATE		BY	PSC
PROJECT		DATE	04/09/17
DATE	11/01/24	SCALE	1:25

PROPAK
STOCK REFRIGERATION UNIT – REF8B
REFRIGERATION SKID
PIPING LAYOUT

DWG. No.: D-ASY-101531-152 SHEET 1 OF 4 REV. 1

PROPAK
440 East Lake Road,
Airdrie, Alberta
Canada T4A 2J8