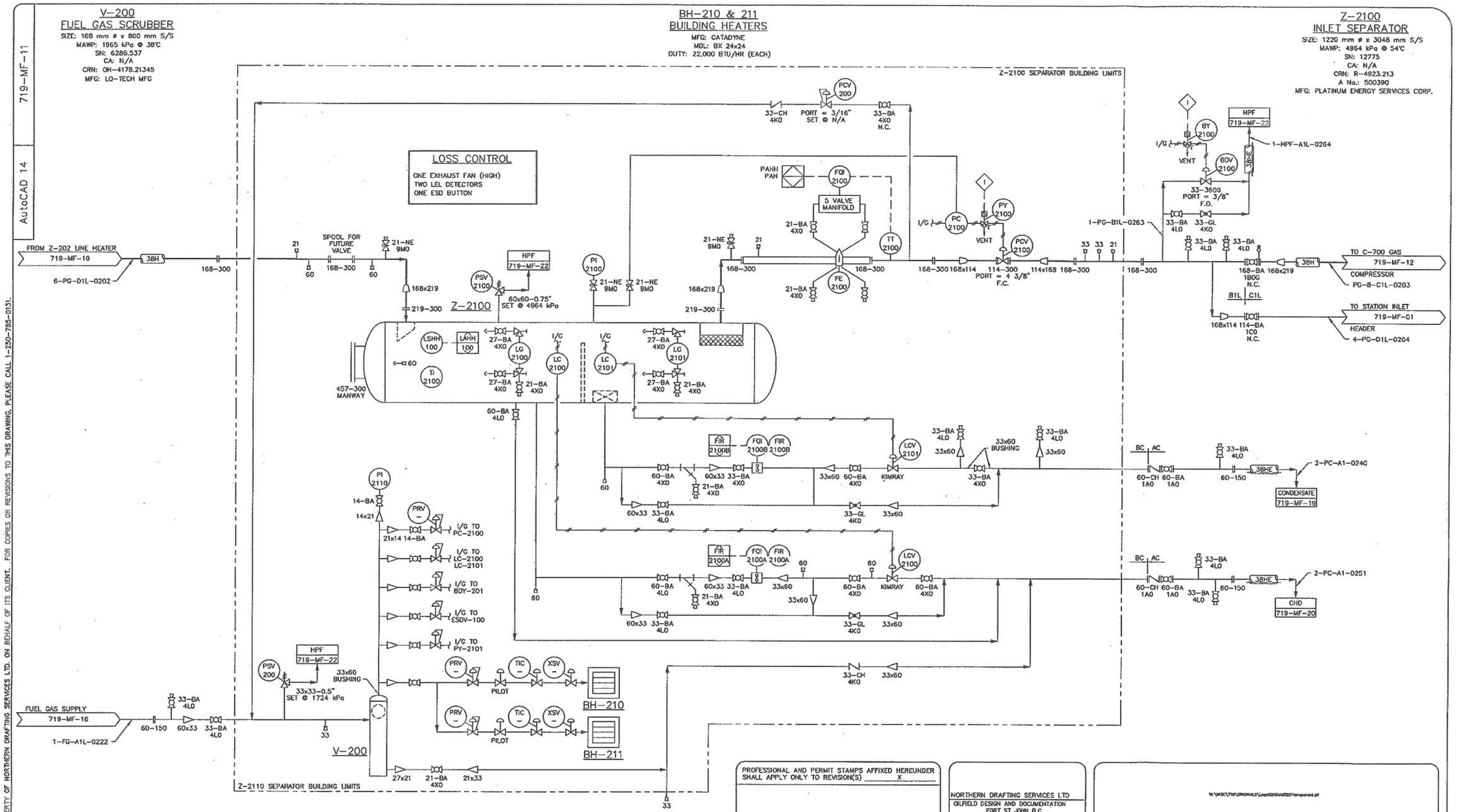

THIS DRAWING IS THE PROPERTY OF NORTHERN DRAFTING SERVICES LTD. ON BEHALF OF ITS CLIENT. FOR COPIES OR REVISIONS TO THIS DRAWING, PLEASE CALL 1-250-785-0131.

NO.	DATE	REVISIONS	DRAWN	CHECK	DESIGN	APPR.
2	08 11 07	MINOR REVSION AS PER FIELD VISIT	WRM	WRM		
1	23 05 06	AS-IS, REDRAWN FROM IMV ORIGINALS	WRM	WRM		
0	30 03 04	ISSUED FOR CONSTRUCTION	WI			

DRAFTING — ENGINEERING

NO.	TITLE
719-PP-01	MECHANICAL PLOT PLAN
719-MF-01 TO 25	MECHANICAL FLOW DIAGRAMS

REFERENCE DRAWINGS

PROFESSIONAL AND PERMIT STAMPS AFFIXED HEREUNDER SHALL APPLY ONLY TO REVISION(S) _____X_____

PROFESSIONAL AND PERMIT STAMPS

NORTHERN DRAFTING SERVICES LTD
OILFIELD DESIGN AND DOCUMENTATION
FORT ST JOHN B.C.
1-250-785-0131

APPROVED FOR CONSTRUCTION

BY_____ DATE YY MM DD

BY_____ DATE YY MM DD

a-23-I, 94-H-3 PICKELL CENTRAL COMPRESSOR STATION
Z-2100 INLET SEPARATOR
MECHANICAL FLOW DIAGRAM

CLIENT FILE NO.	SCALE	NORTHERN DRAWING NUMBER	REV.
-	NTS	719-MF-11	2
CLIENT DWG NUMBER			