P-100A/100B
CHARGE PUMP
MAKE: GOULD
MODEL: 2X3-6 3996 ST
SUCTION: 3"-150# F.F.
DISCHARGE: 2"-150# F.F.
IMPELLAR SIZE: 6.0 INCH
MAWP: 70 PSI

P-110A/110B
MULTI-STAGE CENT. PUMP
MAKE: WETHERFORD
MODEL: 538-2600-85 STAGE
SUCTION: 4"-150# R.F.
DISCHARGE: 3"-1500# R.F.
CUSTOMER SUPPLIED

PI-100 TO 104
SUCTION PRESSURE INDICATOR
MAKE: WGI / WIKA
MEASUREMENT: 0-100 PSI
SIZE: 4" FACE, 1/2" NPT

PSLL-100 TO 102
LOW PRESSURE SWITCH
MAKE: CCS DUAL SNAP
MODEL: 6900GZE14
SIZE: 1/2"
PRESS. RANGE: 9-75psi INCREASING
3-69psi DECREASING
DESIGN PRESS.: FALLING SHUTOFF
SET AT 15 PSIG DECREASING

PSHL-110A/110B
LOW PRESSURE SWITCH
MAKE: CCS DUAL SNAP
MODEL: 6900GZE20
SIZE: 1/2"
PRESS. RANGE: 225-925psi DECREASING
DESIGN PRESS.: FALLING SHUTOFF
SET AT 300 PSIG DECREASING

BPCV-110A/110B
BACK PRESSURE CONTROL VALVE
MAKE: FISHER
MODEL: 657-45 D-BODY
SIZE: 2"-1500#

PC-110A/110B
PRESSURE CONTROLLER
MAKE: FISHER
MODEL: 4150KR
0-3000 PSIG BOURDON TUBE, 316SS
30-6 PSIG OUTPUT, REVERSE ACTING
ACTUATOR YOKE TYPE 4150

FE-100
FLOW ELEMENT
MAKE: PRIMARY FLOW
MODEL: WM0200X2
SIZE: 2.0"x2.0"
RANGE: 40-400 GPM
MAX. PRESSURE: 3,700 psi
CONNECTIONS: SANDWICH STYLE

PIT-110A/110B
PRESSURE TRANSMITTER
MAKE: ROSEMOUNT
MODEL: 2088
ADJUSTABLE RANGE: 0-4,000 psi
1/2" FNPT PROCESS
CONNECTION

VSH-111A/111B
VIBRATION SWITCH
MAKE: MUPHY
MODEL: VS-2-EX
CLASS 1, DIV. 1
LOCATIOIN: P-221A/221B
CUSTOMER SUPPLIED

PSLL-110A/110B
PRESSURE SWITCH
MAKE: TBA
MODEL: TBA
LOCATIOIN: P-221A/221B
CUSTOMER SUPPLIED

P-200
SKIM OIL PUMP
MAKE: NATIONAL OIL
MODEL: 11D-2L
SIZE: 2.08 HP @ 200 RPM
SUCTION: 2"-NPT
DISCHARGE: 1"-NPT
DIFF. PRESSURE: 320 PSI
FLOW: 10 USGPM

M-200
ELECTRIC MOTOR
MAKE: TECO
SIZE: 5 HP @ 1200
460V/60Hz/3 PHASE
FRAME: 215T
TEXP CLASS 1, DIV. 2

M-100A/100B
ELECTRIC MOTOR (CHARGE PUMP)
MAKE: TECO
SIZE: 20 HP @ 3600 RPM
460V/60Hz/3 PHASE
FRAME: 256TC

M-110A/110B
ELECTRIC MOTOR (MULTI-STAGE CENT.)
MAKE: TECO
SIZE: 150 HP @ 3600 RPM
480V/60HZ/3 PHASE
FRAME: 445TS
CUSTOMER SUPPLIED

DPSH-100
DIFF. PRESS. SHUTDOWN SWITCH
MAKE: CCS DUAL SNAP
MODEL: 646DZE2
SET PRESS.: 15 psi DIFFERENTIAL
CONNECTION: 1/2" NPT

F-101
SUCTION FILTER
MAKE: J.L. FILTRATION
MODEL: 3-BAG FILTER
FILTER SIZE: P2S-25MICRON
CONNECTION SIZE: 3" 150# R.F.W.N.

PSHH-110A/110B
HIGH PRESSURE SWITCH
MAKE: CCS DUAL SNAP
MODEL: 6900GZE22
SIZE: 1/2"
PRESS. RANGE:
700 - 2500 PSI INCREASING
SET AT 2000 PSIG (RISING)

PSV-110A/110B
PRESSURE RELIEF VALVE
MAKE: FARRIS
MODEL: 27CA33-M20
INLET x OUTLET: 1" X 1"
ORIFICE: 0.068 sq in
SET AT 2,200 PSIG

PI-110A/110B
DISCHARGE PRESSURE INDICATOR
MAKE: WGI / WIKA
MEASUREMENT: 0-3,000 PSI
SIZE: 4" FACE, 1/2" NPT

FQI-100
FLOW INDICATOR
MAKE: PRIMARY FLOW
MODEL: F012-A

EJ-110A/110B
EXPANSION JOINT
MAKE: TBA
MODEL: TBA
4"-150# R.F.
MAWP: 150 PSIG
CUSTOMER SUPPLIED

PSHH-110A/110B
PRESSURE SWITCH
MAKE: TBA
MODEL: TBA
LOCATIOIN: P-221A/221B
CUSTOMER SUPPLIED

S-101
SUCTION STABILIZER
MAKE: STATUS FLOW
MODEL: SFU-1502-T-100
SIZE: 100 CUBIC INCH
CONNECTION: 2"-NPT
MAX PRESSURE: TBA PSIG

S-102
DISCHARGE STABILIZER
MAKE: STATUS FLOW
MODEL: SFU-14401-T-100
SIZE: 100 CUBIC INCH
CONNECTION: 2" NPT
MAX PRESSURE: TBA PSIG

VSH-212
VIBRATION SWITCH
MAKE: MUPHY
MODEL: VS-2-EX
CLASS 1, DIV. 1
LOCATION: P-200

LSL-212
LOW LEVEL SWITCH
MAKE: MURPHY
MODEL: EL-150-EX
LOCATION: P-200

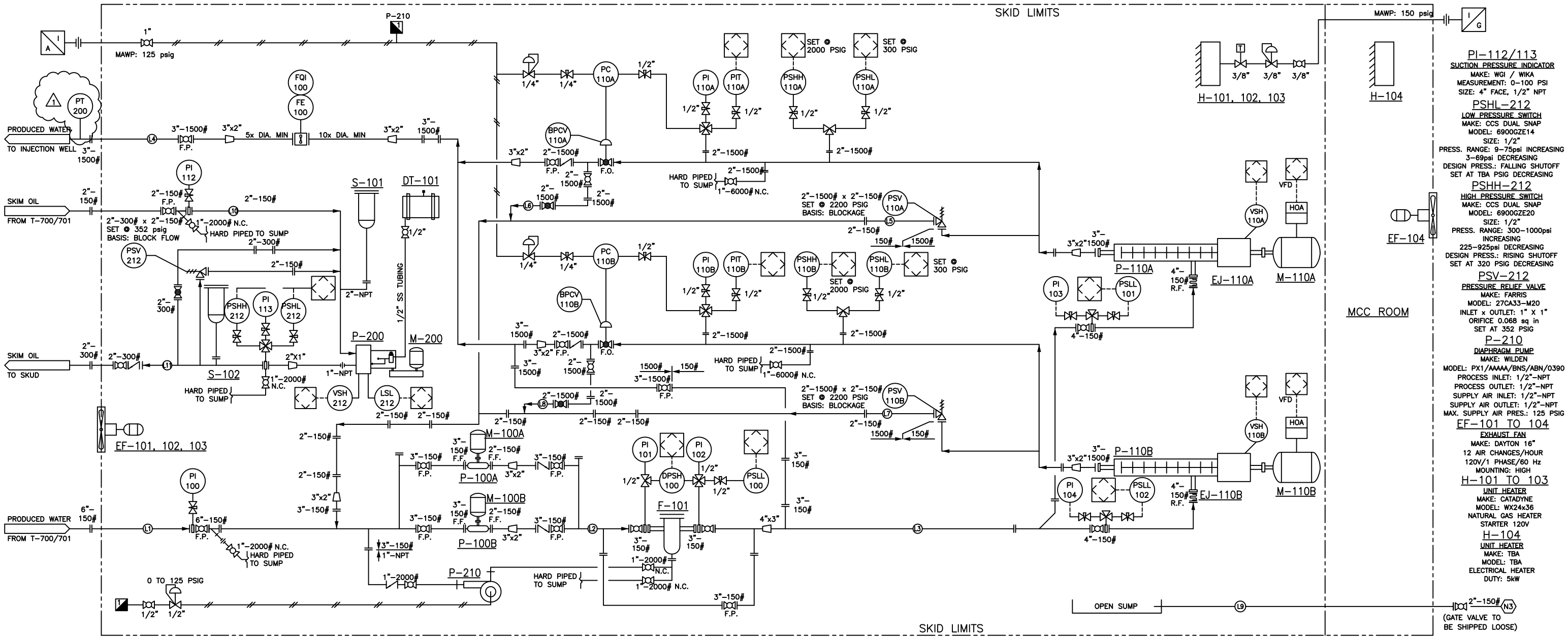

PI-112/113
SUCTION PRESSURE INDICATOR
MAKE: WGI / WIKA
MEASUREMENT: 0-100 PSI
SIZE: 4" FACE, 1/2" NPT

PSHL-212
LOW PRESSURE SWITCH
MAKE: CCS DUAL SNAP
MODEL: 6900GZE14
SIZE: 1/2"
PRESS. RANGE: 9-75psi INCREASING
3-69psi DECREASING
DESIGN PRESS.: FALLING SHUTOFF
SET AT TBA PSIG DECREASING

PSHH-212
HIGH PRESSURE SWITCH
MAKE: CCS DUAL SNAP
MODEL: 6900GZE20
SIZE: 1/2"
PRESS. RANGE: 300-1000psi INCREASING
225-925psi DECREASING
DESIGN PRESS.: RISING SHUTOFF
SET AT 320 PSIG DECREASING

PSV-212
PRESSURE RELIEF VALVE
MAKE: FARRIS
MODEL: 27CA33-M20
INLET x OUTLET: 1" X 1"
ORIFICE 0.068 sq in
SET AT 352 PSIG

P-210
DIAPHRAGM PUMP
MAKE: WILDEN
MODEL: PX1/AAAAA/BNS/ABN/0390
PROCESS INLET: 1/2"-NPT
PROCESS OUTLET: 1/2"-NPT
SUPPLY AIR INLET: 1/2"-NPT
SUPPLY AIR OUTLET: 1/2"-NPT
MAX. SUPPLY AIR PRES.: 125 PSIG

EF-101 TO 104
EXHAUST FAN
MAKE: DAYTON 16"
12 AIR CHANGES/HOUR
120V/1 PHASE/60 Hz
MOUNTING: HIGH

H-101 TO 103
UNIT HEATER
MAKE: CATADYNE
MODEL: WX24x36
NATURAL GAS HEATER
STARTER 120V

H-104
UNIT HEATER
MAKE: TBA
MODEL: TBA
ELECTRICAL HEATER
DUTY: 5kW

DRAWING NO.	REFERENCE DRAWINGS	REV.	DESCRIPTION	BY	DATE	CHK	APP.	CLIENT
		1	AS PER MARK-UPS	KK	2012-10-15	KW	–	–
		0	ISSUED FOR CONSTRUCTION	RW	2007-08-28	–	–	–

DRAWN BY: R.WENN	DATE 07-08-23
DESIGNED BY: J.REMEZOFF	DATE 07-08-19
CHECKED BY: –	DATE –
APPROVED BY: –	DATE –
CLIENT BY: –	DATE –

Canadian Natural

TITLE
DAWSON
01-05-080-16W5
WATER INJECTION PUMP PACKAGE
PROCESS & INSTRUMENTATION

SCALE	JOB NO.	DRAWING NO.	REV.
NTS	–	DAW0105-220-0012	1