P-112A/B
MUD INJECTION BOOSTER PUMPS

RATED CAPACITY: 112 m^3/h @ 353 kPa ΔP
MOTOR: 30 kW
(2 x 100%)
INSULATION: None
TRACING: None
TRIM: PW-185-ASA/PW-187-ASA

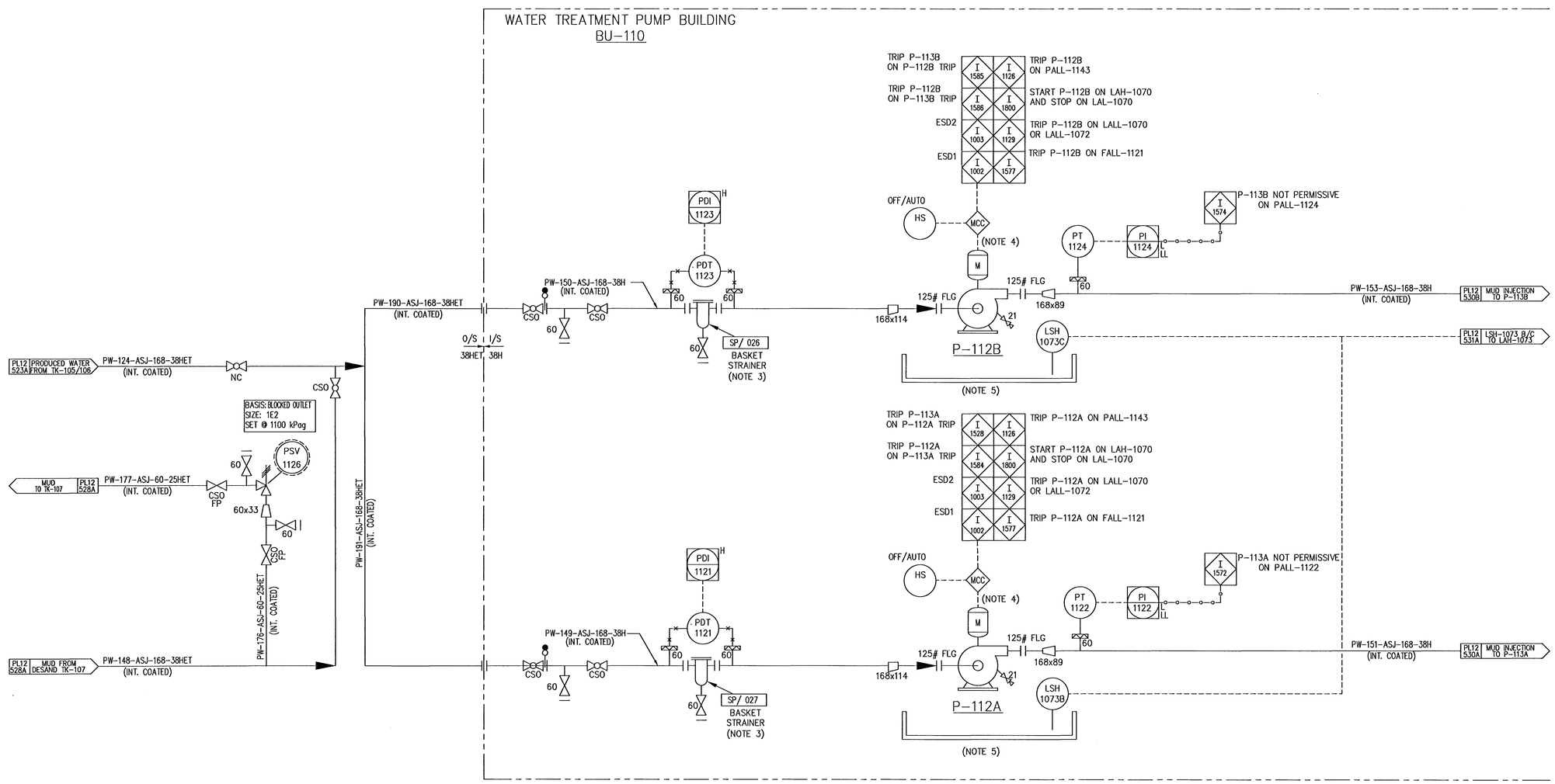

NOTES:
1. ALL EQUIPMENT AND INSTRUMENT TAGS ARE PREFIXED WITH "BL-".
2. ALL INSTRUMENT, VENT AND DRAIN CONNECTIONS SHALL BE 2" MINIMUM ON ALL INTERNALLY COATED PIPING.
3. BASKET STRAINER TO HAVE 15mm HOLES.
4. REFER TO P&ID PL12557B FOR DETAILS OF ELECTRICAL MONITORING AND CONTROL SIGNALS.
5. P-109, P-112A AND P-113A AND P-112B AND P-113B PROVIDED WITH A COMMON SUMP WITH LEVEL SWITCH.

REFERENCE DRAWINGS	DWG. NO.
.	.
.	.
.	.
.	.
.	.
.	.

CAUTION : READ BEFORE EXCAVATION
ALL EXCAVATIONS MUST BE CARRIED OUT AS PER Cenovus Energy Inc. "GROUND DISTURBANCE PRACTICES"

NO.	DATE	PROJECT DESCRIPTION	PROJ.	AFE	EPCM Co.	EPCM No.	APPD.
1	2012-06-28	BEAR LAKE 31K BBL/D BATTERY	.	11140425	BANTREL	1083	
.	–	.	.	.	.	.	.
.	–	.	.	.	.	.	.
.	–	.	.	.	.	.	.
.	–	.	.	.	.	.	.
.	–	.	.	.	.	.	.
.	–	.	.	.	.	.	.
.	–	.	.	.	.	.	.
.	–	.	.	.	.	.	.
.	–	.	.	.	.	.	.
.	–	.	.	.	.	.	.
.	–	.	.	.	.	.	.
.	–	.	.	.	.	.	.

ISSUE STAGE	DATE	BY	CHKD.	APPD.
DESIGN (A)	2012-11-21	YB	GB	LZ
CONSTRUCTION (0)	2013-04-15	DJG	LZ	LZ
CONSTRUCTION (1)	2013-11-15	YB	LZ	LZ
.	–	.	.	.
.	–	.	.	.
.	–	.	.	.
.	–	.	.	.
.	–	.	.	.

REV. NO. FORMAT: 1-A
REFERS TO PROJECT NUMBER "-1" "-A" ISSUE STAGE, OR THE LIST OF TRUCKS
ISSUE STAGES: (A, B, C = PRELIMINARY (B, C FOR APPROVAL SCHEDULE), STAGE 0 = ISSUED FOR THE CONSTR. STAGE 1, 2, 3 = POST CONSTR. REVS.

REV. NUMBER 1-1

PERMIT STAMP
BANTREL
APEGGA PERMIT: P 3913
D. Mitchell
27 Nov 13

ENGINEER'S STAMP
PROFESSIONAL ENGINEER LESLIE M. ZUPPE
2013/11/26

PERMIT STAMP AND PROFESSIONAL STAMP AFFIXED ABOVE SHALL APPLY ONLY TO REV(s) 1-1

cenovus ENERGY

MAIN FAC.	NORTH BTRY. 12-11
MAIN SDL.	12-11-083-20 W4M
FAC TYPE	BATTERY
SITE SDL.	12-11-083-20 W4M
SCALE	NTS (A1 Size)
EPCM No.	1083
EPCM Co.	BANTREL
TITLE	BEAR LAKE – P&IDS MUD INJECTION BOOSTER PUMPS P-112A/B
AREA	PELICAN LAKE
CLASS	A
FILE NO.	PL12529A

Date Time

Drawings Must Comply with Cenovus Energy Drafting & Drawing Specifications

OUC-TL006 (Licensed At Size Title Block) v1

W:\1083\PIPING\DWG\P&ID\PL12529A_REV1-1.DWG,11/26/2013 1:50 PM,ROJAS, VIVIENNE A.