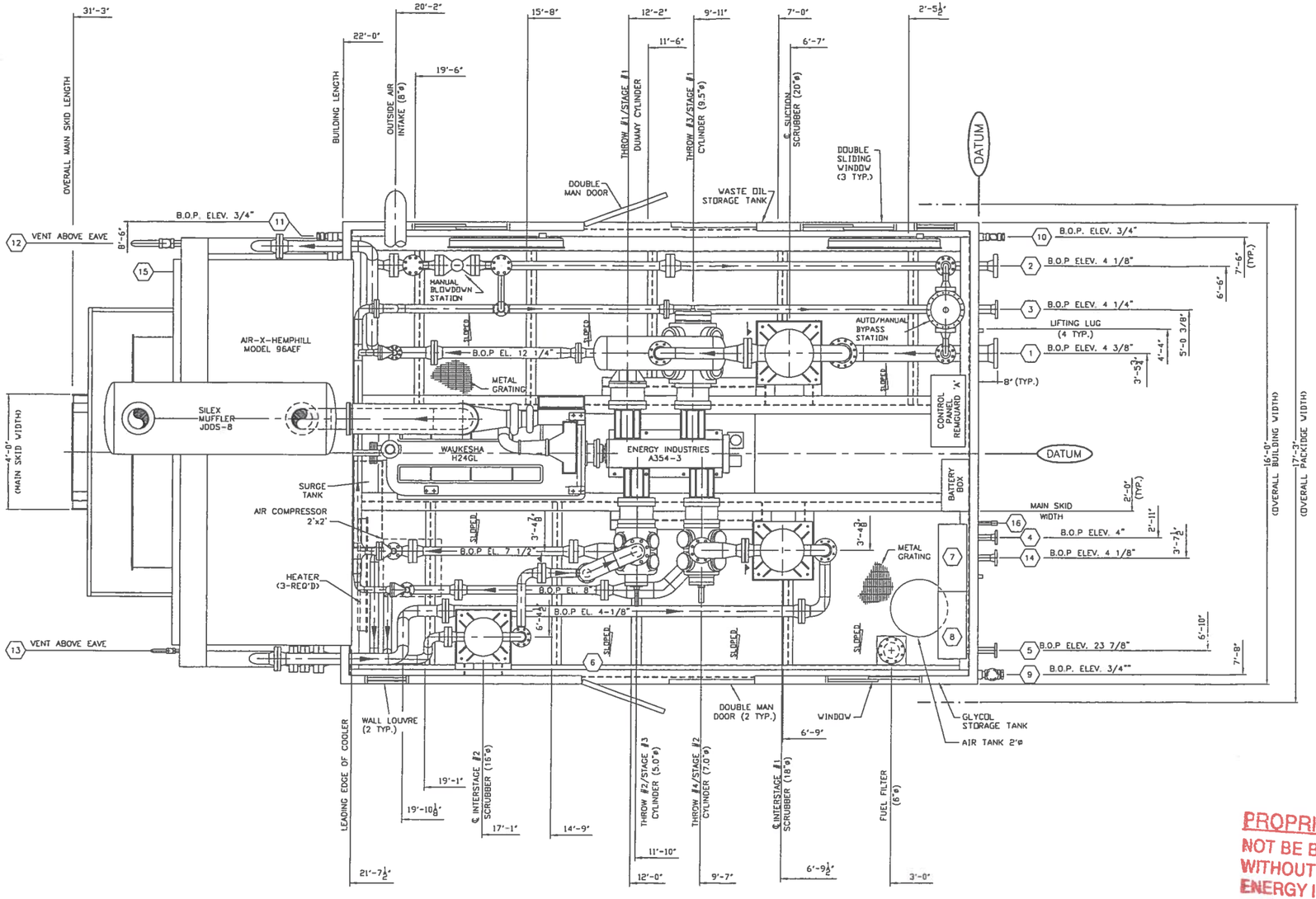

PROPRIETARY MATERIAL
NOT BE BE RE-PRODUCED OR DISTRIBUTED WITHOUT THE PRIOR WRITTEN CONSENT OF ENERGY INDUSTRIES INC.

GENERAL SPECIFICATIONS

OVERALL PACKAGE LENGTH (FT)	31'-3"
OVERALL PACKAGE WIDTH (FT)	17'-3"
OVERALL PACKAGE HEIGHT FT)	16'-8 7/8"
OVERALL PACKAGE WEIGHT (LBS)	83,000
GLYCOL STORAGE CAPACITY (U.S. GAL.)	95
WASTE OIL STORAGE CAPACITY (U.S. GAL.)	100
SOUR WASTE OIL STORAGE CAPACITY (U.S. GAL.)	50

NOTES:

1. ALL DIMENSIONS TAKEN FROM BOTTOM OF SKID.
2. ALL OTHER NOTES FOUND ON DWG. #PFLOW.
3. ALL SKID EDGE CONNECTIONS ± 1/8" TOLERANCE

LUBE OIL DAY TANKS	■ 56 U.S GAL.	☐ CRANE RAILS	
BRIDGE CRANE	☐ YES	■ NO	☐ 2-TON ☐ 3-TON ☐ 5-TON
SEAL PAN	■ YES	☐ NO	■ FLAT ☐ SLOPED (1" OVER 10')
LOADING METHOD	☐ JACK & ROLL	☐ LIVE ROLL	☐ CRANE
PROCESS GAS	☐ SWEET	■ SOUR	☐ ACID GAS PERCENT SOUR 0.2 %H_2S

DESCRIPTION

1	INITIAL SUCTION	6'-300# RF'WN
2	FINAL DISCHARGE	3'-900# RF'WN
3	HIGH PRESSURE VENT HEADER	3'-150# RF'WN
4	SCRUBBER DRAIN HEADER	2'-150# RF'WN
5	FUEL GAS INLET	2'-150# RF SCR'D
6	GLYCOL FILL CONNECTION	3/4' RUBBER HOSE (15' LG)
7	CYLINDER OIL TANK FILL	2'-3000# (NPT)
8	ENGINE/COMPRESSOR OIL TANK FILL	2'-3000# (NPT)
9	GLYCOL TANK DRAIN	2'-3000# (NPT)
10	WASTE OIL TANK DRAIN	2'-3000# (NPT)
11	SOUR WASTE OIL TANK DRAIN	2'-3000# (NPT)
12	LOW PRESSURE STARTER VENT HEADER	2'-PIPE (c/w BIRDSCREEN)
13	LOW PRESSURE INSTRUMENT VENT HEADER	1'-3000# (NPT) (c/w BIRDSCREEN)
14	START GAS SUPPLY	2'-600# RF'WN
15	SOUR WASTE OIL TANK VENT	1/2' TUBING
16	INSTRUMENT AIR TO OFFSKID	1'-3000# NPT

No.	REVISION	DATE	BY
2	AS BUILT	02/12/04	VS
1	ISSUED FOR CONSTRUCTION	12/09/03	VS
0	ISSUED FOR APPROVAL	11/13/03	VS

ENERGY INDUSTRIES INC. | 4303 - 11TH STREET N.E. CALGARY ALBERTA CANADA

TITLE: GENERAL ARRANGEMENT
WAUKESHA H24GL/GEMINI A354-3
AIR-X-HEMPHILL 96AEF

CUSTOMER: PROGRESS ENERGY LTD.
CURRANT GAS COMPRESSOR
LSD: b-9-C/94-A-16

SCALE: 1/2"=1'-0" | DATE: 11/13/03 | BY: VS | DATE RELEASED: 2/27/04 | RELEASED BY:
STEP # NONE | UNIT # 1103 | DRAWING NO.: 1103-GA | REV. 2

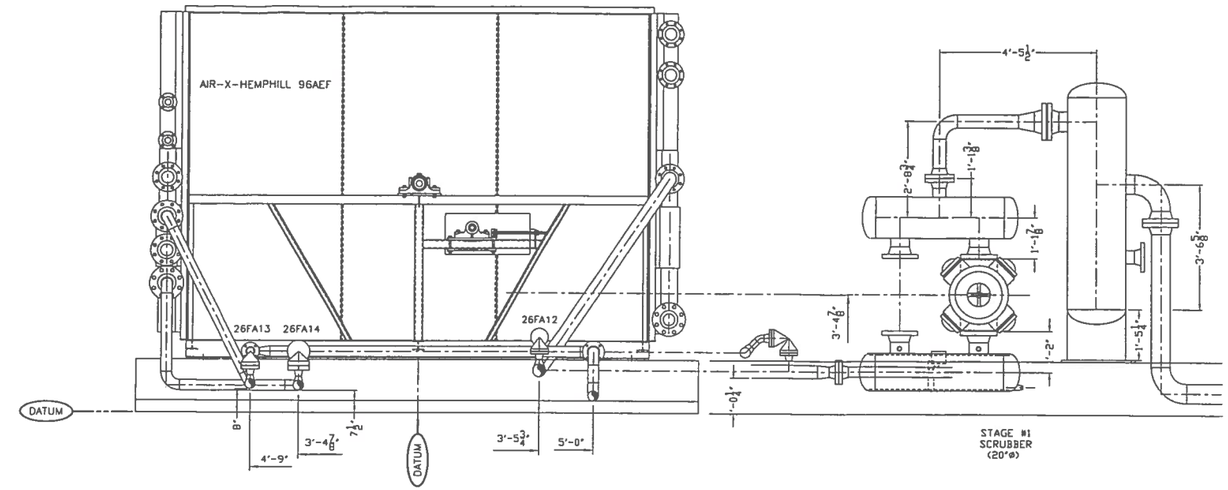

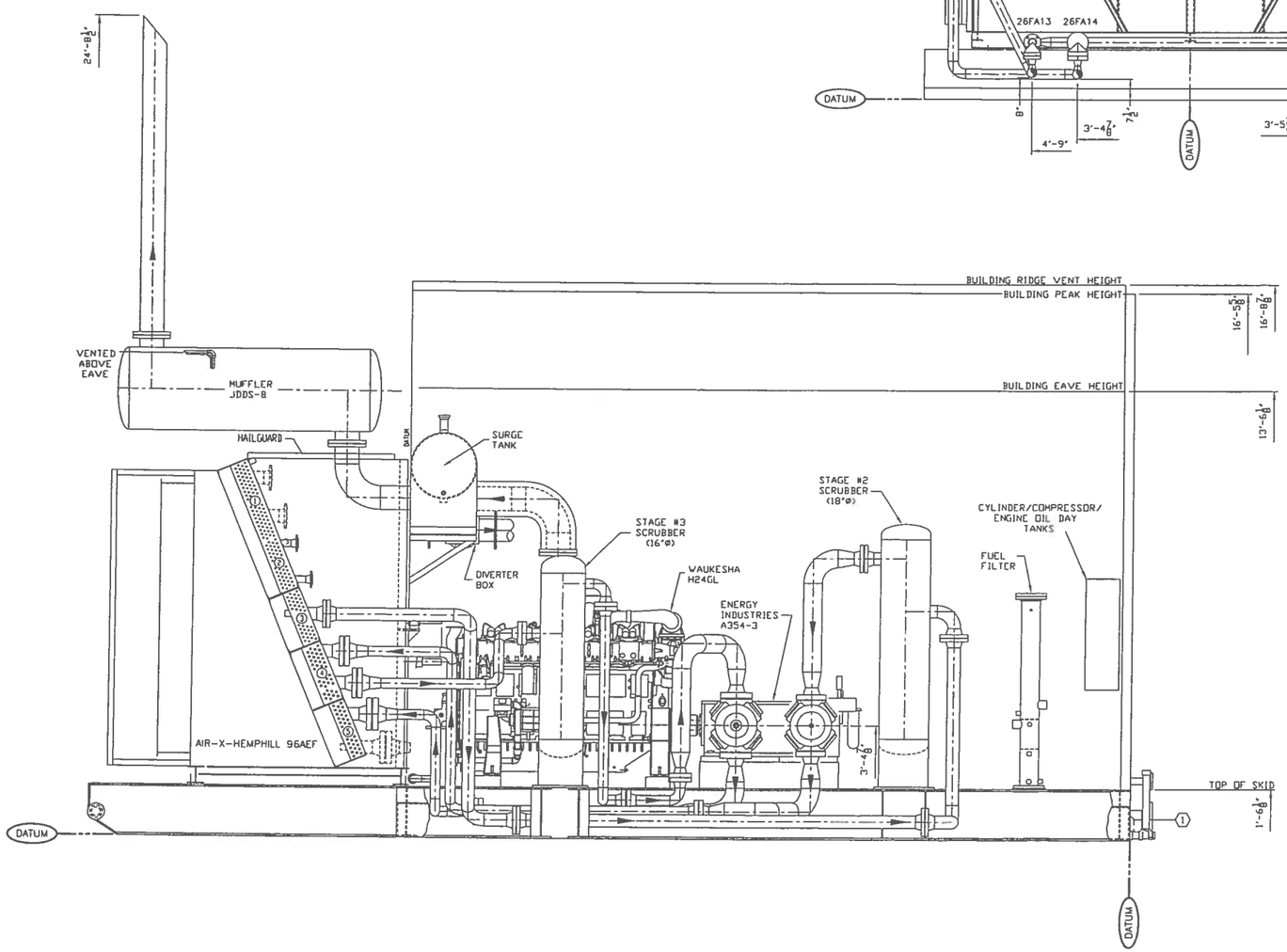

PROPRIETARY MATERIAL
NOT BE BE RE-PRODUCED OR DISTRIBUTED
WITHOUT THE PRIOR WRITTEN CONSENT OF
ENERGY INDUSTRIES INC.

No.	REVISION	DAT
1	AS BUILT	02/27/
0	ISSUED FOR CONSTRUCTION	12/30/

ENERGY INDUSTRIES INC. 4303 - 11TH STREET N.E. CALGARY ALBERTA CA

TITLE: ELEVATION
WAUKESHA H24GL/GEMINI A354-3
AIR-X-HEMPHILL 96AEF

CUSTOMER: PROGRESS ENERGY L
CURRANT GAS COMPRES
LSD: 6-9-C/94-A-

SCALE: 1/2"=1'-0" | DATE: 11/13/03 | BY: VS | DATE RELEASED: 2/27/04 | RELEA

STEP # - | UNIT #1103 | DRAWING NO.: 1103-ELEV

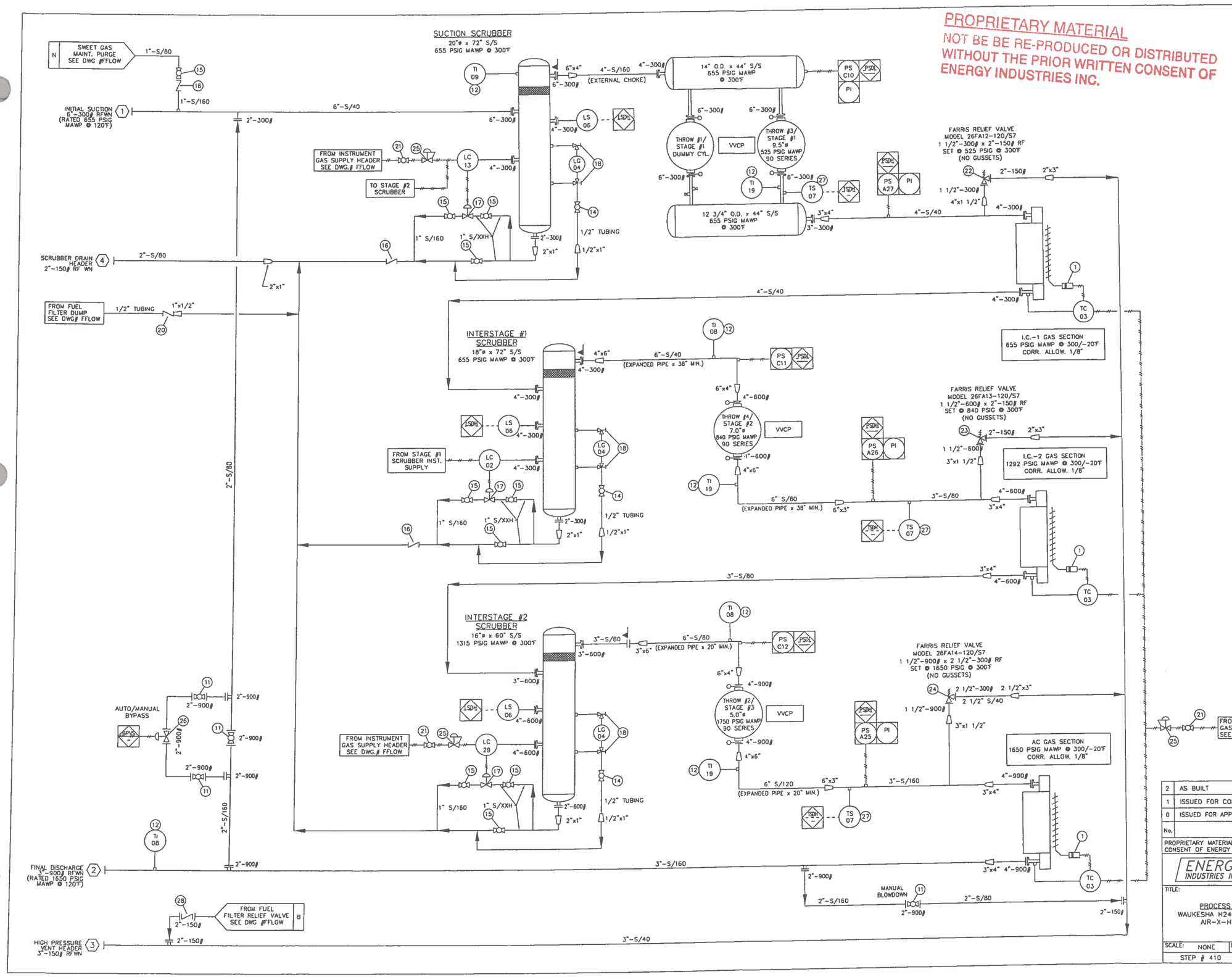

PROPRIETARY MATERIAL
NOT BE BE RE-PRODUCED OR DISTRIBUTED WITHOUT THE PRIOR WRITTEN CONSENT OF ENERGY INDUSTRIES INC.

MATERIAL SPECIFICATIONS

PAINT:	OVERALL UNIT: VALSPAR 20-F-34 "WARM GREY" ENAMEL
PRIMER:	COMMERCIAL IRON OXIDE NON-LIFTING PRIMER.
TUBING:	PROCESS TUBING – 316SS TYPE "SS" FITTINGS w/ 316SS TUBING. ("SS" FITTINGS – 316SS BODY w/ SS BACK FERRULE & SS FRONT FERRULE) INSTRUMENTATION TUBING – CADMIUM PLATED "S" TYPE FITTINGS w/ 304SS TUBING. ("S" FITTINGS– CARBON STEEL BODY w/ SS BACK FERRULE & CARBON STEEL FRONT FERRULE)
PROCESS: PIPING	100% X-RAY, 1/8" CORROSION ALLOWANCE. PWHT, PICKLED AND OILED
SCRUBBERS: & BOTTLES	100% X-RAY, 1/8" CORROSION ALLOWANCE, PWHT, PICKLED & OILED, UT ALL CAT 'D' WELDS
OIL:	ESSOLUBE CLX-30 IN ENGINE & COMPRESSOR FRAME.
GLYCOL:	50% INHIBITED ETHYLENE GLYCOL/WATER SOLUTION IN ENGINE AND AUXILIARY JACKET WATER SYSTEMS.
BILL OF: MATERIALS	ON SEPARATE SHEET TO BE PROVIDED WITH DRAWING.
NOTE #1:	SPACER PLATES ARE PROVIDED FOR FUTURE INSTALLATION OF ORIFICE PLATES (IF REQUIRED)
NOTE #2:	UNIT COMPLETE WITH SEAL PAN.
NOTE #3:	BYPASS/BLOWDOWN LINES ARE TO BE BUTTWELDED.
NOTE #4:	PRESSURE VESSELS TO BE REGISTERED IN ALBERTA & B.C. ONLY.
NOTE #5:	–
NOTE #6:	BOLTING ON ALL PROCESS FLANGE CONNECTIONS TO BE SA-193-B7M STUDS AND SA-194-2HM NUTS.
NOTE #7:	ALL GASKETS ARE 316 STAINLESS STEEL FLEXITALLIC.
NOTE #8:	ALL NIPPLES IN CONTACT WITH SCRUBBER TO BE SCH.XXH

GENERAL INFORMATION

COMPR. FRAME – GEMINI A354-3
– RATED RPM = 1800
– SERIAL NUMBER = A203

ENGINE – WAUKESHA H24GL
– RATED 530 HP @ 1800 RPM
– SERIAL NUMBER = C-14572/1

COOLER – AIR-X-HEMPHILL 96AEF
– SERIAL NUMBER = 36179-9240

CYL. STAGE #1 THROW #1 – SERIAL NUMBER = DUMMY
CYL. STAGE #3 THROW #2 – SERIAL NUMBER = 90G1417
CYL. STAGE #1 THROW #3 – SERIAL NUMBER = 90G1415
CYL. STAGE #2 THROW #4 – SERIAL NUMBER = 90G1416

PANEL – SPARTAN CONTROLS REMGUARD 'A'
– SERIAL NUMBER = AL-10241-AA

LEGEND

- PROCESS LINES
- FUEL GAS, START GAS, DRAIN AND VENT LINES
- SUPPLY (CLEAN) OIL LINES
- WASTE OIL LINES
- WATER LINES
- PNEUMATIC TUBING
- ELECTRICAL WIRING
- CAPILLIARY LINES
- SPACER
- SPECTICAL BLIND
- SCREEN (CONE STRAINER)
- PANEL ALARM/SHUTDOWN (ELECTRIC)
- PANEL ALARM/SHUTDOWN (PNEUMATIC)
- LOCAL MOUNTED INSTRUMENT
- PANEL MOUNTED INSTRUMENT
- PNEUMATIC TO CURRENT

NOTE: SOUR PROCESS GAS – 0.2% H_2S

No.	REVISION	DATE	BY
2	AS BUILT	02/12/04	VS
1	ISSUED FOR CONSTRUCTION	12/03/03	VS
0	ISSUED FOR APPROVAL	11/17/03	VS

PROPRIETARY MATERIAL: NOT TO BE REPRODUCED OR DISTRIBUTED WITHOUT THE PRIOR WRITTEN CONSENT OF ENERGY INDUSTRIES INC.

ENERGY INDUSTRIES INC. 4303 – 11TH STREET N.E. CALGARY ALBERTA CANADA

TITLE: PROCESS FLOW DIAGRAM
WAUKESHA H24GL / GEMINI A354-3
AIR-X-HEMPHILL 96AEF

CUSTOMER: PROGRESS ENERGY LTD.
CURRANT GAS COMPRESSOR
LSD: b-9-C/94-A16

SCALE: NONE | DATE: 11/17/03 | BY: VS | DATE RELEASED: 2/26/04 | RELEASED BY:
STEP # 410 | UNIT# 1103 | DRAWING NO.: 1103-PFLOW | REV. 2

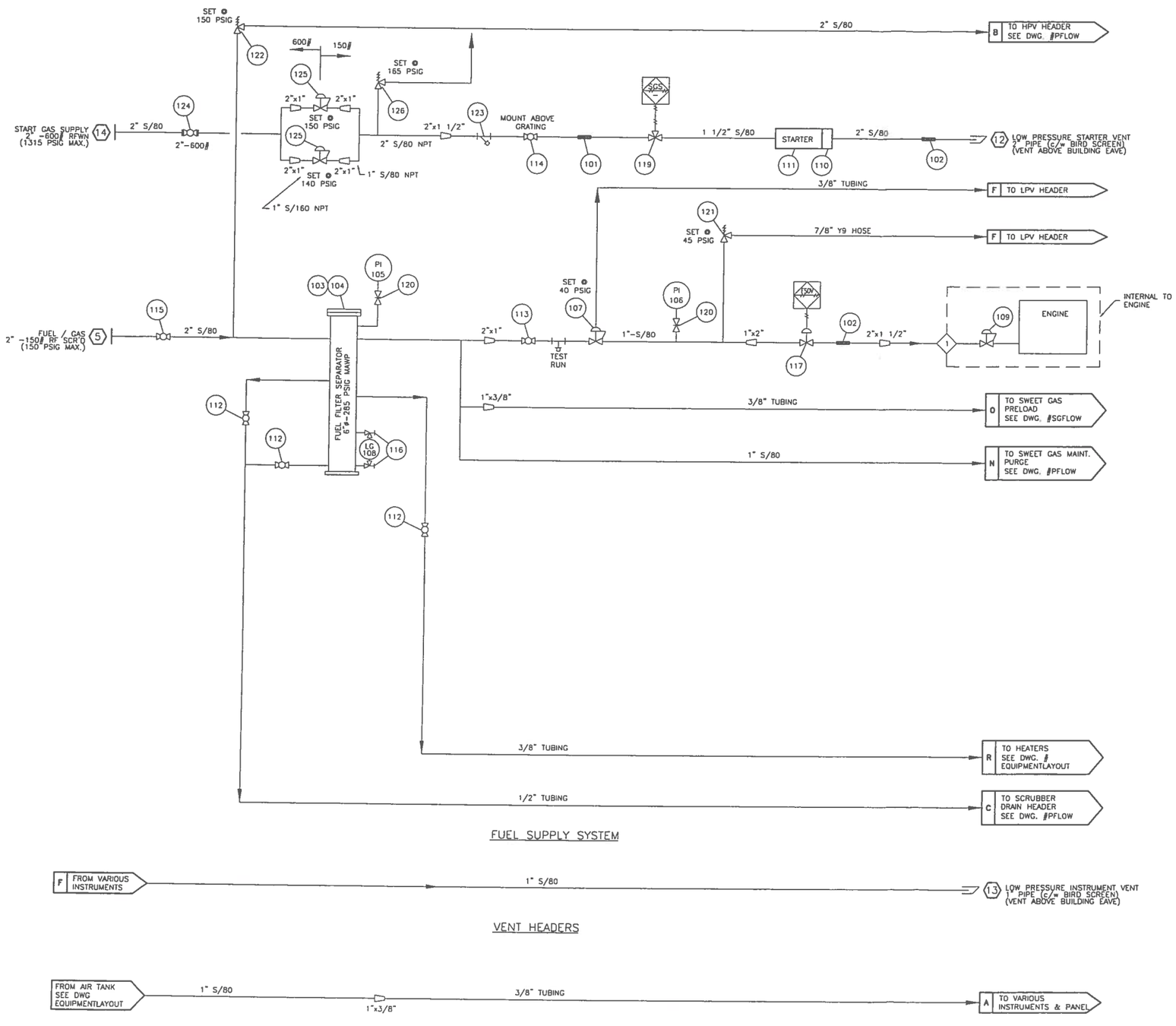

BILL OF MATERIALS

No.	PART No.	DESCRIPTION	QUANTITY
101	88A361	CONNECTOR, BRAIDED, MAGIC SPAN, MCX 1-1/2-12, 1.5" FNPT, 530 PSIG @ 70°F, 12"LG, T321 SS HOSE & BRAID, CARBON STEEL FITTINGS	1
102	12C177	CONNECTOR, BRAIDED, MAGIC SPAN, MCX 2-12, 2" FNPT, 535 PSIG @ 70°F, 12"LG, T321 SS HOSE & BRAID, CARBON STEEL FITTINGS	2
103	12A720L	FILTER, HOUSING, FUEL, ENERGY INDUSTRIES, 2"-FNPT, 6" DIA, 285 PSIG, LEFT HAND, 2" FNPT LC AND LS CONNECTIONS (SEE STEP 251)	1
104	11A167	FILTER, ELEMENT, FUEL,PECO, PCH (c/w FILTER)	1
105	10X113	GAUGE, PRESSURE, WIKA, 213.53.063, 0.25" MNPT BOTTOM MNT, 0-200 PSIG, MAX 140°F, 2.5" FACE, LIQUID FILLED, DUAL SCALE, SS CASE, BRASS INTERNALS	1
106	88A726	GAUGE, PRESSURE, WIKA, 213.53.063, 0.25" MNPT BOTTOM MNT, 0-60 PSIG, MAX 140°F, 2.5" FACE, LIQUID FILLED, DUAL SCALE, SS CASE, BRASS INTERNALS	1
107	NPN	REGULATOR, PRESSURE, FISHER, 627-497, 1" FNPT, 15-40 PSIG, 300 PSIG INLET, 0.5" TRIM, GREEN SPRING, DUCTILE IRON	1
108	88E057	SIGHT GLASS, REDLINE, PEACOCK, 41100108, 0.625" OD, 330 PSIG @ 100°F, 12" LG.	1
109	NPN	REGULATOR, PRESSURE, FISHER, Y692, 1.5" FNPT, 0.75" ORIFICE (c/w ENGINE)	1
110	NPN	STARTER FLANGE, TDI, MODEL T3027398, 2" NPT	1
111	NPN	STARTER, GAS, TDI, T306-60015-01R, 1" FNPT X 2" FNPT, 90-150 PSIG, ALUMINUM	1
112	M22CR-.5	VALVE, BALL, MERIDIAN, M22CR-.5, 0.5" FNPT, 2000 PSIG @ 150°F, ASTM A216 WCB, NACE MR01-75	3
113	M22CR-1.0	VALVE, BALL, MERIDIAN, M22CR-1.0, 1" FNPT, 2000 PSIG @ 150°F, ASTM A216 WCB, NACE MR01-75	1
114	M22CR-1.5	VALVE, BALL, MERIDIAN, M22CR-1.5, 1.5" FNPT, 2000 PSIG @ 150°F, ASTM A216 WCB, NACE MR01-75	1
115	M22CR-2.0	VALVE, BALL, MERIDIAN, M22CR-2.0, 2.0" FNPT, 2000 PSIG @ 150°F, ASTM A216 WCB, NACE MR01-75	1
116	ITC	VALVE, GAUGE, DANIEL, 0.5" FNPT x 0.625" TUBE, 600 PSIG @ 200°F, 1SET, CARBON STEEL	1
117	11A496	VALVE, CONTROL, GLOBE, KMM, 500-211-111, 2" FNPT, 600 PSIG, MAX 180°F, ASTM A395	1
118	–	–	–
119	11A708	VALVE, CONTROL, RELAY, TDI, RLVA 25683001201, 1.5" FNPT, 18-70 PSI SUPPLY, 450 PSI MAWP, MAX. 200°F, ALUMINUM	1
120	88A607	VALVE, NEEDLE, CENTURY, CM2-3-M22T-B-V, 0.25" MNPT X 0.25" FNPT, 6000 PSIG @ 100°F, ASTM A108, CAST IRON	2
121	88E254	VALVE, RELIEF, FISHER, 1805-13X1, 1" FNPT, 10-60 PSIG, MAX 150°F, CADMIUM SPRING, ASTM A108, CAST IRON	1
122	NPN	VALVE, RELIEF, TAYLOR, 8200, 2" MNPT x 2" FNPT, SET @ 150 PSIG, G ORIFICE, CARBON STEEL	1
123	11A079	Y-STRAINER, MATCO 140S, 1 1/2" FNPT, 20 MESH, 400 PSI, @ 150°F, 304SS MESH, ASTM A126, B BODY	1
124	88E091	VALVE, BALL, NUTRON, R20R06B, 2"-600# RF, STD TRIM	1
125	15F011	REGULATOR, PRESSURE, FISHER, 627, 1" FNPT, 70-150 PSIG, 1750 PSIG INLET, 1/4" TRIM, RED SPRING, CAST STEEL	2
126	NPN	VALVE, RELIEF, TAYLOR, 8200, 2" MNPT x 2" FNPT, SET @ 165 PSIG, G ORIFICE, CARBON STEEL	1

PROPRIETARY MATERIAL
NOT BE BE RE-PRODUCED OR DISTRIBUTED WITHOUT THE PRIOR WRITTEN CONSENT OF ENERGY INDUSTRIES INC.

NOTES:
1. FOR ALL OTHER NOTES & GENERAL INFORMATION SEE DWG. #PFLOW.
2. ALL TUBING IS 304SS c/w CADMIUM PLATED 'S' TYPE FITTINGS.
3. SIGNAL TUBING IS 1/4".

No.	REVISION	DATE	BY
3	AS BUILT	02/27/04	JN
2	ADDED DUAL REG STATION FOR START GAS	01/30/04	VS
1	ISSUED FOR CONSTRUCTION	12/03/03	VS
0	ISSUED FOR APPROVAL	11/18/03	VS

PROPRIETARY MATERIAL: NOT TO BE REPRODUCED OR DISTRIBUTED WITHOUT THE PRIOR WRITTEN CONSENT OF ENERGY INDUSTRIES INC.

ENERGY INDUSTRIES INC. 4303 - 11TH STREET N.E. CALGARY ALBERTA CANADA

TITLE: FUEL & START GAS FLOW DIAGRAM
WAUKESHA VGF
H24GL

CUSTOMER: PROGRESS ENERGY LTD.
CURRANT GAS COMPRESSOR
LSD: b-9-C/94-A16

SCALE: NONE | DATE: 11/18/03 | BY: VS | DATE RELEASED: 2/27/04 | RELEASED BY:
W.O. # 510 | UNIT # 1103 | DRAWING NO.: 1103-FFLOW | REV.3

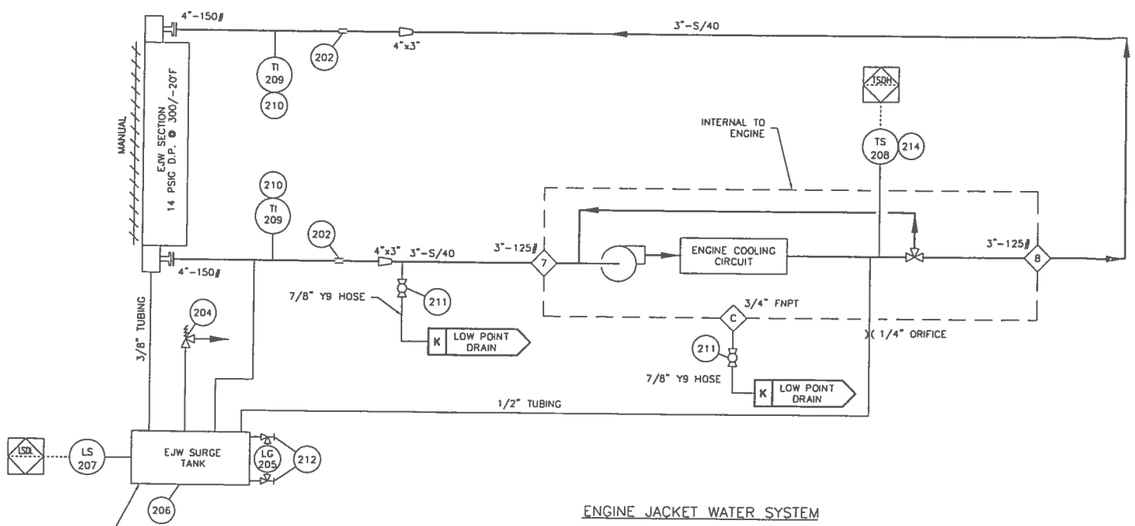

ENGINE JACKET WATER SYSTEM

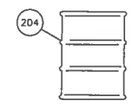

COOLANT

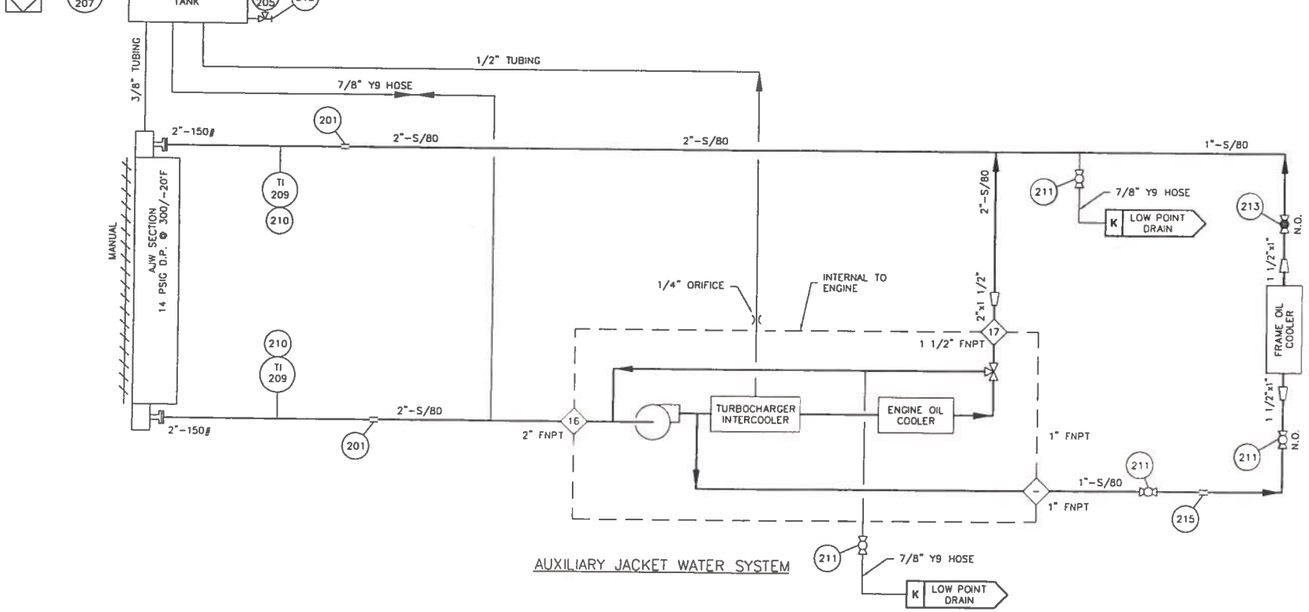

AUXILIARY JACKET WATER SYSTEM

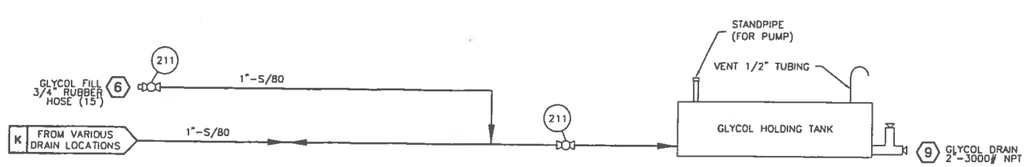

GLYCOL DRAIN SYSTEM

NOTES:

1. FOR ALL OTHER NOTES & GENERAL INFORMATION SEE DWG. #PFLOW.
2. EJW CAPACITY: AJW CAPACITY:
3. ALL TUBING IS 304SS c/w CADMIUM PLATED 'S' TYPE FITTINGS.
4. SLOPE ALL VENT LINES UP TO SURGE TANK.

BILL OF MATERIALS

No.	PART No.	DESCRIPTION	QUANTITY
201	0038-0013-011	COUPLING, PIPE, DRESSER, 0038-0013-011, 2" PIPE, 1500 PSIG, MAX 212°F, STYLE 38, CARBON STEEL W/ BUNA S GASKET	2
202	0038-0036-011	COUPLING, PIPE, DRESSER, 0038-0036-011, 4" PIPE, 1100 PSIG, 212°F, STYLE 38, CARBON STEEL W/ BUNA S GASKET	2
203	12C281	GLYCOL, UCARTHERM, 50% ETHYLENE GLYCOL - 50% WATER (SEE STEP #921)	205 L
204	88A710	CAP, RADIATOR, STANT, STN-10294, SET AT 15 PSIG	2
205	88E057	SIGHT GLASS, REDLINE, PEACOCK, 411001108, 0.625" OD, 330 PSIG @ 100 F, 12" LG	2
206	88E323	SURGE TANK, 16"ø x 36"LG., DUAL COMPARTMENT (DWG. #ST16X36DGS REV. 2) (SEE STEP #621)	1
207	11A913	SWITCH, LEVEL, MURPHY, 45-L1200, 2" MNPT, 2000 PSIG @ 300°F MIN. S.G. 0.65, 316SS FLOAT NICKEL PLATED STEEL BODY VITON SEALS, CSA CLASS I DIV. I GRP C,D	2
208	NPN	SWITCH, TEMPERATURE, CCS DUAL SNAP, 6900TU16, 185°F TO 315°F, SET @ 200°F RISING	1
209	88A186	THERMOMETER, BI METALLIC, TREND, 33025A006G4D, 0.5" MNPT, 0-250°F, 3" FACE, 0.250" O.D., 2.50" PROBE, DUAL SCALE	4
210	37D003	THERMOWELL, 0.5" FNPT X 0.75" MNPT, 2.50" DEPTH, 0.260" BORE, 304 SS	4
211	M22CR-1.0	VALVE, BALL, MERIDIAN, M22CR-1.0, 1" FNPT, 2000 PSIG @ 150°F, ASTM A216 WCB, NACE MR01-75	8
212	1TC	VALVE, GAUGE, DANIEL, 209-01-049C 1TC, 0.5" FNPT X 0.625" TUBE, 3600 PSIG @ 250°F., 1 SET, CARBON STEEL	2
213	88E090	VALVE, GLOBE, NEWCO, 1" 28T-FS2, 1" FNPT CLASS 800, 2000 PSIG @ 100 F, REG. PORT, ASTM A105	1
214	27D117	THERMOWELL, 0.5" FNPT x 0.5" FNPT, 6" LG, 0.385" BORE, 304SS, c/w 2" U DIM.	1
215	11A683	COUPLING, PIPE, AEROQUIP, NH1600C100B02BB, 1" PIPE	1
216	-	-	-
217	-	-	-
218	-	-	-
219	-	-	-
220	-	-	-

PROPRIETARY MATERIAL
NOT BE BE RE-PRODUCED OR DISTRIBUTED WITHOUT THE PRIOR WRITTEN CONSENT OF ENERGY INDUSTRIES INC.

No.	REVISION	DATE	BY
2	AS BUILT	02/12/04	VS
1	ISSUED FOR CONSTRUCTION	12/03/03	VS
0	ISSUED FOR APPROVAL	11/18/03	VS

PROPRIETARY MATERIAL: NOT TO BE REPRODUCED OR DISTRIBUTED WITHOUT THE PRIOR WRITTEN CONSENT OF ENERGY INDUSTRIES INC.

ENERGY INDUSTRIES INC.
4303 - 11TH STREET N.E. CALGARY ALBERTA CANADA

TITLE: WATER FLOW DIAGRAM
WAUKESHA VGF
H24GL

CUSTOMER: PROGRESS ENERGY LTD.
CURRANT GAS COMPRESSOR
LSD: b-9-C/94-A16

SCALE: NONE | DATE: 11/18/03 | BY: VS | DATE RELEASED: 2/27/04 | RELEASED BY:
W.O. # 520 | UNIT # 1103 | DRAWING NO.: 1103-WFLOW | REV.2

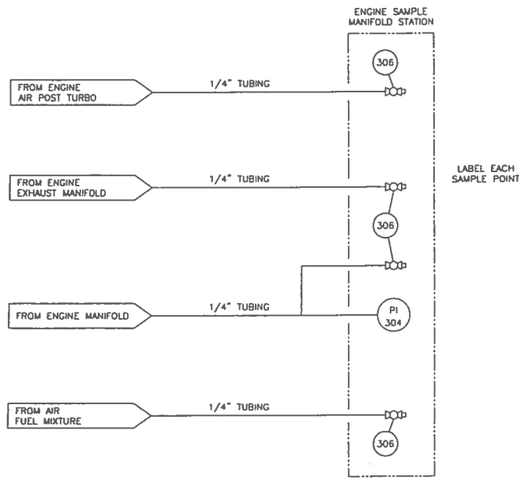

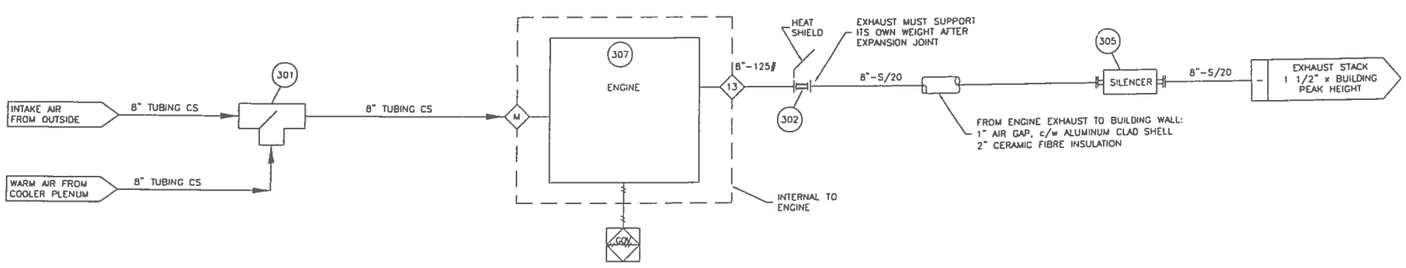

AIR INTAKE & EXHAUST SYSTEMS

BILL OF MATERIALS

No.	PART No.	DESCRIPTION	QUANTITY
301	NPN	AIR DIVERTER BOX, ENERGY INDUSTRIES, 8" FF, 12"LG X 10"W X 10"H, SA-36	1
302	8BE450	EXPANSION JOINT, 8"-150# FF x CUSTOM WAUK. CONN., 12" LG., SS	1
-	-	- -	-
304	88AB44	GAUGE, PRESSURE, WIKA, 213.53.063, 0.25" MNPT BOTTOM MNT, 30" HG-30 PSIG, MAX 140°F, 2.5" FACE, LIQUID FILLED, DUAL SCALE, SS CASE, SS INTERNALS, NACE MR01-75	1
305	NPN	MUFFLER, SILEX, JDDS-8-SISO-612, HOSPITAL GRADE, SIDE IN/SIDE OUT c/w GUSSETS ON OUTLET	1
306	M11S-.25	VALVE, BALL, MERIDIAN, M11S-.25, 0.25" FNPT, 1000 PSIG @ 150°F, ASTM A351CF8M BODY AND BALL, 316SS STEM	4
307	NPN	IGNITION, WAUKESHA, CEC (c/w ENGINE)	1
308	-	-	-
309	-	-	-
310	-	-	-

PROPRIETARY MATERIAL
NOT BE BE RE-PRODUCED OR DISTRIBUTED WITHOUT THE PRIOR WRITTEN CONSENT OF ENERGY INDUSTRIES INC.

NOTES:
1. FOR ALL OTHER NOTES & GENERAL INFORMATION SEE DWG. #PFLOW.
2. ALL TUBING IS 304SS c/w CADMIUM PLATED 'S' TYPE FITTINGS.
3. SIGNAL TUBING IS 1/4".

No.	REVISION	DATE	BY
-	-	-	-
-	-	-	-
-	-	-	-
2	AS BUILT	02/12/04	VS
1	ISSUED FOR CONSTRUCTION	12/03/03	VS
0	ISSUED FOR APPROVAL	11/18/03	VS

ENERGY INDUSTRIES INC. 4303 - 11TH STREET N.E. CALGARY ALBERTA CANADA

TITLE: AIR & EXHAUST FLOW DIAGRAM
WAUKESHA VGF
H24GL

CUSTOMER: PROGRESS ENERGY LTD.
CURRANT GAS COMPRESSOR
LSD: b-9-C/94-A16

SCALE: NONE | DATE: 11/18/03 | BY: VS | DATE RELEASED: 2/26/04 | RELEASED BY:
STEP #530 | UNIT #1103 | DRAWING NO.: 1103-AEFLOW | REV. NO.: 2

BILL OF MATERIALS			
No.	PART No.	DESCRIPTION	QUANTITY
401	LCM-12	CONTROLLER, LEVEL, KENCO, LCM-12, 0.5" FNPT, 6.5 PSIG @ 180°F, 0.5" POST MOUNT, ALUMINUM, CSA CLASS III, TYPE 4	1
402	11A683	COUPLING, PIPE, AEROQUIP, NH1600C100B02B8, 1" PIPE	1
403	88E237	DAYTANK, ENERGY INDUSTRIES, 56 GALLON, SA-36	1
404	–	–	–
405	–	–	–
406	10X113	GAUGE, PRESSURE, WIKA, 213.53.063, 0.25" MNPT BOTTOM MNT, 0-200 PSIG, MAX 140°F, 2.5" FACE, LIQUID FILLED, DUAL SCALE, SS CASE, BRASS INTERNALS	1
407	88A892	OIL, LUBE, ESSO, ESSOLUBE GLX-30	205 L
408	88E145	SCALE, GRADUATED, DAYTANK, 56 GALLON	1
409	H12X38	SIGHT GLASS, CLEAR TUBING, 0.5" OD, 42" LG., PLASTIC	1
410	NPN	SWITCH, TEMPERATURE, CCS DUAL SNAP, 6900TU16, 185°F TO 315°F, SET @ 205°F RISING	1
411	–	–	–
412	–	–	–
413	NPN	SWITCH, PRESSURE, CCS DUAL SNAP, 6900G14, 2-71 PSI, SET @ 35 PSIG FALLING, MAX 500 PSI.	1
414	M22CR-.75	VALVE, BALL, MERIDIAN, M22CR-.75, 0.75" FNPT, 2000 PSIG @ 150°F, ASTM A216 WCB, NACE MR01-75	4
415	88A687	VALVE, GATE, BONNEYFORGE, HL106-1T, 1" FNPT CLASS 800, 800 PSIG @ 850°F, REG. PORT, ASTM A105	1
416	88A607	VALVE, NEEDLE, CENTURY, CM2-3-M22T-B-V, 0.25" MNPT X 0.25" FNPT, 6000 PSIG @ 150°F, ASTM A108	1
417	27D117	THERMOWELL, 0.5" FNPT X 0.5" MNPT, 6" LG, 0.385" BORE, 304 SS c/w 2" U DIM.	1

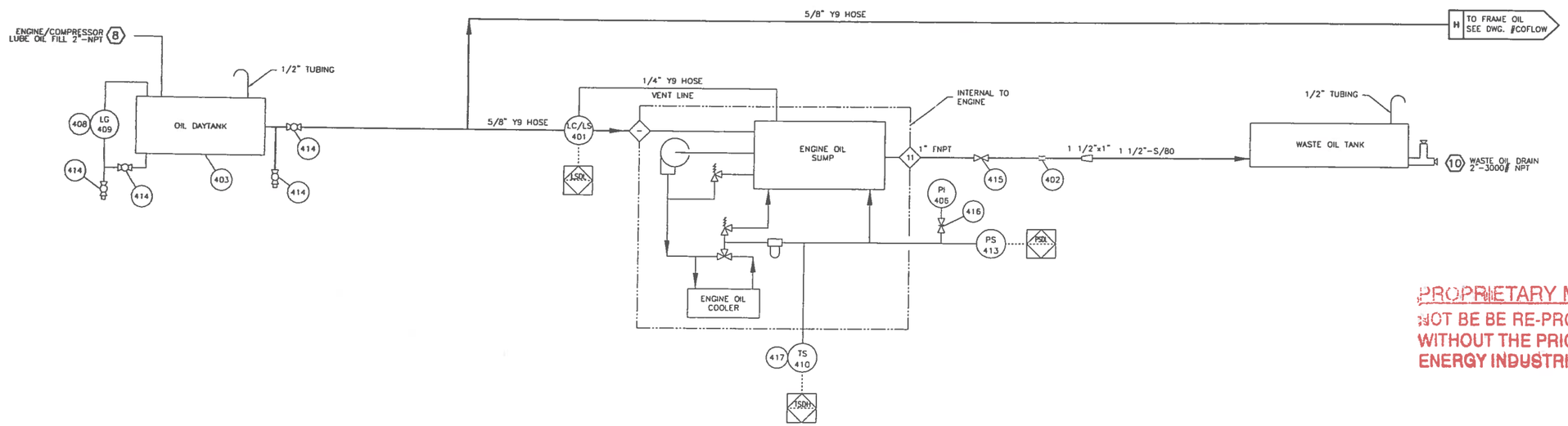

ENGINE LUBE OIL SYSTEM

PROPRIETARY MATERIAL
NOT BE BE RE-PRODUCED OR DISTRIBUTED WITHOUT THE PRIOR WRITTEN CONSENT OF ENERGY INDUSTRIES INC.

NOTES:
1. FOR ALL OTHER NOTES & GENERAL INFORMATION SEE DWG. #PFLOW.
2. ALL TUBING IS 304SS c/w CADMIUM PLATED 'S' TYPE FITTINGS.

No.	REVISION	DATE	BY
–	–	–	–
–	–	–	–
–	–	–	–
2	AS BUILT	02/12/04	VS
1	ISSUED FOR CONSTRUCTION	12/03/03	VS
0	ISSUED FOR APPROVAL	11/18/03	VS

ENERGY INDUSTRIES INC. 4303 - 11TH STREET N.E. CALGARY ALBERTA CANADA

TITLE: ENGINE OIL FLOW DIAGRAM
WAUKESHA VGF
H24GL

SCALE: NONE | DATE: 11/18/03 | BY: VS
STEP #540 | UNIT #1103

CUSTOMER: PROGRESS ENERGY LTD.
CURRANT GAS COMPRESSOR
LSD: b-9-C/94-A16

DATE RELEASED: 2/27/04 | RELEASED BY: VS
DRAWING NO.: 1103-EOFLOW | REV NO.: 2

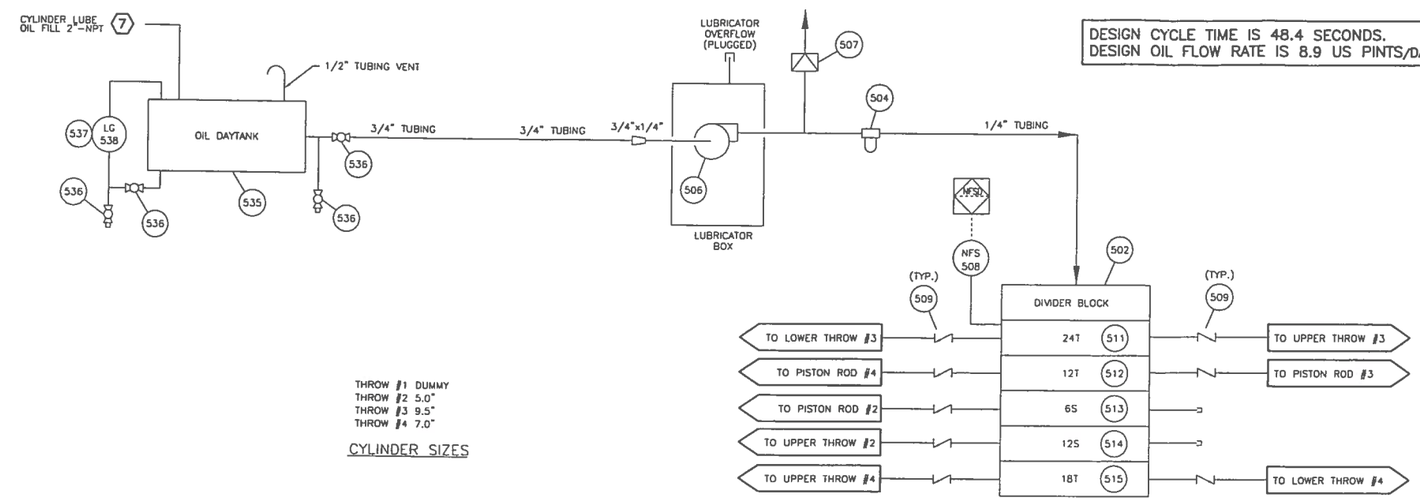

DESIGN CYCLE TIME IS 48.4 SECONDS.
DESIGN OIL FLOW RATE IS 8.9 US PINTS/DAY

THROW #1 DUMMY
THROW #2 5.0"
THROW #3 9.5"
THROW #4 7.0"

CYLINDER SIZES

CYLINDER LUBE OIL SUPPLY

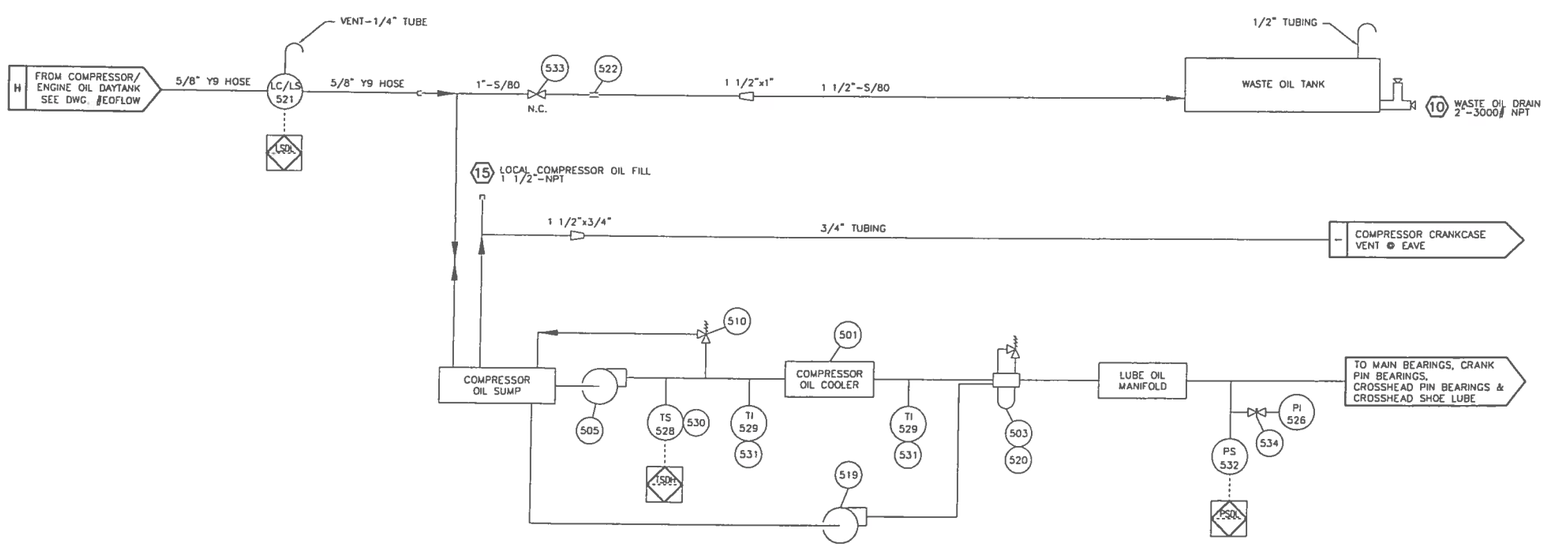

COMPRESSOR FRAME LUBE OIL CIRCULATING SYSTEM

BILL OF MATERIALS c/w FRAME

No.	PART No.	DESCRIPTION	QUANTITY
501	11-PS-5808	COOLER, OIL, GEMINI, 11-PS-5808, SS	1
502	12A979	DIVIDER BASE BLOCK, MCL-5, 5 POSITION BASE	1
503	2-100004	FILTER, HOUSING, OIL, GEMINI, 1.0" FNPT, 25 MICRON	1
504	11A066	FILTER, INLINE, SINTERED, GEMINI, 11A066, 0.25" FNPT, 40 MICRON, 5000 PSIG RATED	1
505	1-100016	PUMP, GEAR, OIL	1
506	100-PS-5832	PUMP, PLUNGER, PREMIER, 0.250" PLUNGER	1
507	11A068	RUPTURE DISK, BLUE	1
508	DNFT-LED	SWITCH, NO-FLOW, DNFT-LED FITS LINCOLN LUBE BLOCKS, CSA CLASS I, DIV I, GRP B,C,D	1
509	880511	VALVE, CHECK, BALL, PREMIER, 90024, 0.25" NPT	8
510	3W-PS-1284	VALVE, RELIEF, OIL	1
511	13A412	VALVE, DIVIDER, LINCOLN, 24T	1
512	12A983	VALVE, DIVIDER, LINCOLN, 12T	1
513	13A048	VALVE, DIVIDER, LINCOLN, 6S	1
514	13A386	VALVE, DIVIDER, LINCOLN, 12S	1
515	13A387	VALVE, DIVIDER, LINCOLN, 18T	1
516	–	–	–
517	–	–	–
518	–	–	–
519	NPN	PUMP MANUAL	1
520	16A739	FILTER, ELEMENT, OIL	1

BILL OF MATERIALS SUPPLIED BY E.I.

No.	PART No.	DESCRIPTION	QUANTITY
521	LCM-12	CONTROLLER, LEVEL, KENCO, LCM-12, 0.5" FNPT, 6.5 PSIG MAWP, MAX 180°F, 0.5" POST MOUNT, ALUMINUM, CSA CLASS III TYPE 4	1
522	11A683	COUPLING, PIPE, AEROQUIP, NH1600C100B028B, 1.0" PIPE	1
523	–	–	–
524	–	–	–
525			
526	10X113	GAUGE, PRESSURE, WIKA, STYLE 213.53.063, 0.25" MNPT BOTTOM MNT, 0-200 PSIG, MAX 140°F, 2 1/2" FACE, LIQUID FILLED, DUAL SCALE, SS CASE, BRASS INTERNALS	1
527			
528	NPN	SWITCH, TEMPERATURE, CCS DUAL SNAP, 6900TU14, 80°F TO 205°F, SET @ 185°F RISING	1
529	BBA186	THERMOMETER, BI METALLIC, TREND, 33025A006G4D, 0.5" MNPT, 0-250°F, 3" FACE, 2.50" PROBE, 0.250" OD, DUAL SCALE	2
530	27D117	THERMOWELL, 0.5" FNPT X 0.5" MNPT, 6" LG, 0.385" BORE, 304 SS c/w 2" U DIM.	1
531	BBE012	THERMOWELL, 0.5" FNPT X 1" MNPT, 2.50" DEPTH, 0.260" BORE, 304 SS	2
532	BBE132	SWITCH, PRESSURE, CCS DUAL SNAP, 6900G14, 2-71 PSI, SET @ 25 PSIG FALLING MAX 500 PSI.	1
533	BBA687	VALVE, GATE, BONNEYFORGE, HL106-1T, 1" FNPT CLASS 800, 800 PSIG @ 850°F, REG. PORT, ASTM A105	1
534	BBA607	VALVE, NEEDLE, CENTURY, CM2-3-M22T-B-V, 0.25" MNPT X 0.25" FNPT, 6000 PSIG @ 100°F, ASTM A108	1
535	BBE237	DAYTANK, ENERGY INDUSTRIES, 56 GALLON, SA-36	1
536	M22CR-.75	VALVE, BALL, MERIDIAN, M22CR-.75, 0.75" FNPT, 2000 PSIG @ 150°F, ASTM A216 WCB, NACE MR01-75	4
537	BBE145	SCALE, GRADUATED, DAYTANK, 56 GALLON	1
538	H12X38	SIGHT GLASS, CLEAR TUBING, 0.5" OD, 42" LG., PLASTIC	1
539	–	–	–

PROPRIETARY MATERIAL
NOT BE BE RE-PRODUCED OR DISTRIBUTED WITHOUT THE PRIOR WRITTEN CONSENT OF ENERGY INDUSTRIES INC.

NOTES;
1. FOR ALL OTHER NOTES & GENERAL INFORMATION SEE DWG. #PFLOW.
2. ALL TUBING IS 304SS c/w CADMIUM PLATED 'S' TYPE FITTINGS EXCEPT AS NOTED. ('S' FITTINGS – CS BODY w/ SS BACK FERRULE & CS FRONT FERRULE)

No.	REVISION	DATE	BY
2	AS BUILT	02/12/04	VS
1	ISSUED FOR CONSTRUCTION	12/03/03	VS
0	ISSUED FOR APPROVAL	11/17/03	VS

PROPRIETARY MATERIAL: NOT TO BE REPRODUCED OR DISTRIBUTED WITHOUT THE PRIOR WRITTEN CONSENT OF ENERGY INDUSTRIES INC.

ENERGY INDUSTRIES INC. 4303 – 11TH STREET N.E. CALGARY ALBERTA CANADA

TITLE: COMPRESSOR OIL FLOW DIAGRAM
GEMINI
A352/4

CUSTOMER: PROGRESS ENERGY LTD.
CURRANT GAS COMPRESSOR
LSD: b-9-C/94-A16

SCALE: NONE | DATE: 11/18/03 | BY: VS | DATE RELEASED: 2/27/04 | RELEASED BY:
W.O. # 550 | UNIT # 1103 | DRAWING NO.: 1103-COFLOW | REV.2

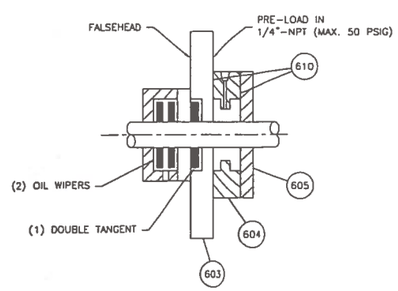

FALSEHEAD

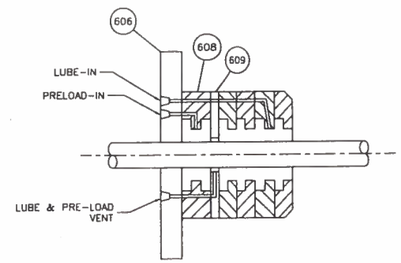

PACKING CASE

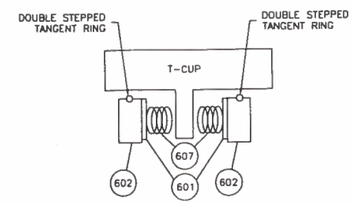

T-CUP DETAIL

No.	PART No.	DESCRIPTION	QUANTITY
		A FRAMES (c/w FRAME)	
601	510-0250-06202-152	BACKING PLATE	4/THR
602	212-0137-12123-303	DOUBLE STEPPED TANGENT RING	4/THR
603	13A375	FALSEHEAD, CUSTOM TAPPED TO ACCOMODATE T-CUP	1/THR
604	191-0137-19679-100	FALSEHEAD T-CUP	1/THR
605	177-0137-19680-100	FALSEHEAD T-CUP PLATE	1/THR
606	14A375	FLANGE, CUSTOM TAPPED TO 1/4" NPT FOR PRELOAD GAS SUPPLY	1/THR
607	090-0025-00002-153	PRELOAD SPRINGS	16/THR
608	191-0137-19681-100	PACKING CASE T-CUP	1/THR
609	177-0137-19645-100	PACKING CASE T-CUP PLATE	1/THR
610	038-V90	O-RING	2/THR
		ALL FRAMES	
611	MMA-6	FLOW METER, DWYER, MMA-6, 2-20 SCFH, 5/16" CONN.	1
612	NPN	GAUGE, PRESSURE, WIKA, 2 1/2" FACE, 0-60 PSIG, 1/4" CBM, LIQUID FILLED, DUAL SCALE, SS	1
613	NPN	GAUGE, PRESSURE, WIKA, 4 1/2" FACE, 15" HG-15 PSIG, 1/4" BM, LIQUID FILLED, DUAL SCALE	1
614	10B265X012	NUT, FISHER 67, PANEL MOUNT, #1#B2657X012	1
615	12A291	PACKING CASE PRELOAD LAMECOID	1
616	15F040	REGULATOR, FISHER 67, 0-35 PSIG, c/w HANDWHEEL, SINGLE HOLE PANEL MOUNTED	1
617	NPN	SWITCH, CCS DUAL SNAP, 604CZJ1-7011, 1.4-18 PSIG, SET @ 1.4 PSIG RISING, NACE, ELECTRIC	1
618	88E073NACE	VALVE, BALL, NUTRON R10S30S, 1"-3000# NPT, NACE	2
619	SS-CHS4-1/3	VALVE, CHECK, NUPRO, 1/4" TUBE, 316SS, SS-CHS4-1/3	1
620	88E433	SIGHT GLASS 2" NPT, ROUND HEX HEAD	1
621	88A607SS	VALVE, NEEDLE, CENTURY, 1/4"-6000#, MxF, 180°, SS	1
622	SS-1VS4	VALVE, NEEDLE, WHITEY, 1/4" TUBE, 316SS	7
623	-	-	-
624	15F038	VALVE, PRESSURE RELIEF, FISHER 1805, 1" NPT, 20-125# SPRING	1
625	88E074NACE	VALVE, BALL, NUTRON, R075S30S, 3/4"-3000# NPT, NACE	2
626	88E888	PANEL, PRELOAD, FORMED, 12 GAUGE PLATE	1
627	-	-	-
628	-	-	-
629	-	-	-

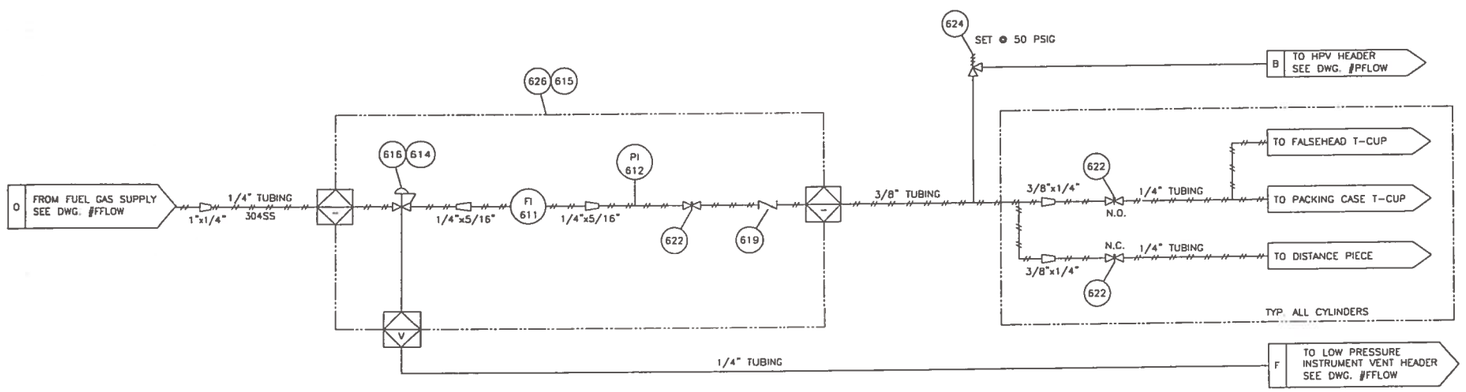

PURGE GAS SYSTEM

PROPRIETARY MATERIAL
NOT TO BE RE-PRODUCED OR DISTRIBUTED WITHOUT THE PRIOR WRITTEN CONSENT OF TOROMONT ENERGY SYSTEMS INC.

"REVISED"
DESTROY ALL PREVIOUS ISSUES

DRAWINGS ISSUED BY
TOROMONT ENERGY SYSTEMS INC.

	FOR REFERENCE
	FOR APPROVAL
	FOR CONSTRUCTION
MAY 13 2004	AS BUILT DRAWINGS

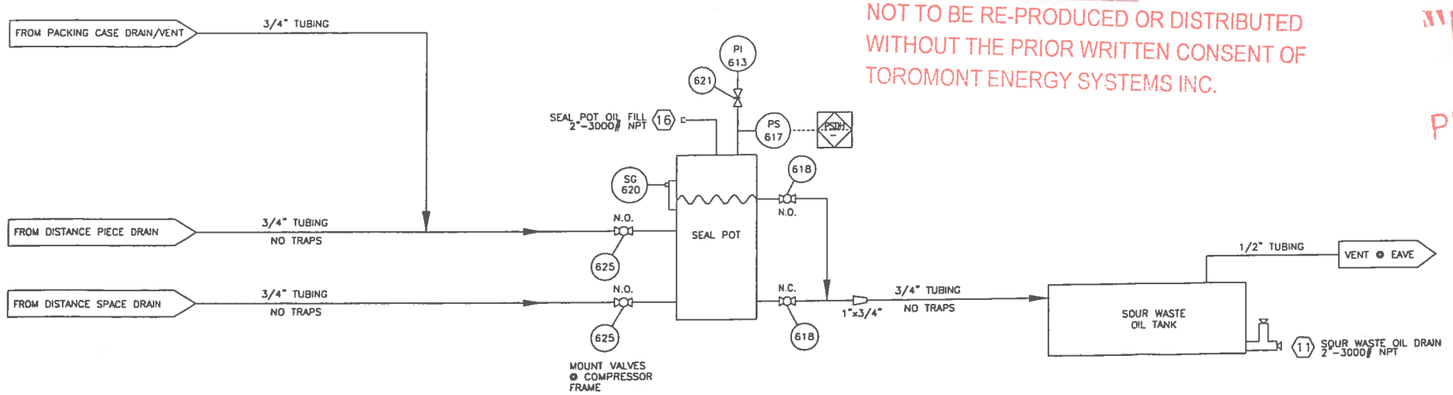

DRAINS & SEAL POT

NOTES:
1. FOR ALL OTHER NOTES & GENERAL INFORMATION SEE DWG. #PFLOW.
2. ALL TUBING IS 316SS c/w 316SS 'SS' TYPE FITTINGS.
3. SEAL POT TO BE MOUNTED ABOVE GRATING.
4. -
5. MODIFIED PACKING CASES ARE 3/4" LONGER THAN FACTORY STANDARD CASES. PACKING CASE CAPSCREWS ARE 3/4" LONGER.

No.	REVISION	DATE	BY
3	ADDED PACKING CASE B.O.M.	05/13/04	VS
2	AS BUILT	02/12/04	VS
1	ISSUED FOR CONSTRUCTION	12/03/03	VS
0	ISSUED FOR APPROVAL	11/20/03	VS

PROPRIETARY MATERIAL: NOT TO BE REPRODUCED OR DISTRIBUTED WITHOUT THE PRIOR WRITTEN CONSENT OF ENERGY INDUSTRIES INC.

ENERGY INDUSTRIES INC.
4303 - 11TH STREET N.E. CALGARY ALBERTA CANADA

TITLE: PURGE & SEALPOT FLOW DIAGRAM

CUSTOMER: PROGRESS ENERGY LTD.
CURRANT GAS COMPRESSOR
LSD: b-9-C/94-A16

SCALE: NONE	DATE: 11/20/03	BY: VS	DATE RELEASED: 5/13/04 RELEASED BY:
W.O. # 560	UNIT # 1103		DRAWING NO.: 1103-SGFLOW REV.3

BUILDING SPECIFICATIONS

DESIGN NOTES

1. THE BUILDING SHALL BE DESIGNED FOR MIN. WIND LOADS OF 160 KMPH, SNOW LOADS OF 2 KPA AND AS PER THE LATEST EDITION OF THE ALBERTA BUILDING CODE.
2. ALL BOLTS, SCREWS, ETC. USED FOR FASTENING ALUMINUM TO ALUMINUM AND ALUMINUM TO STEEL SHALL BE AUSTINETIC STAINLESS STEEL OR CADMIUM PLATED.

GENERAL NOTES

NOTES WHICH ARE APPLICABLE TO THIS JOB WHEN SHADED.

SUBNOTES WHICH ARE APPLICABLE WHEN SHADED.

1 TYPE OF BUILDING

☐ SELF FRAMING–SHED ■ SELF FRAMING–GABLE ☐ RIGID FRAMING–GABLE

2 MATERIAL – WALL AND ROOF PANELS (22 GA. MIN.)

■ GALVANIZED ☐ ALUMINUM ☐ PRE–PAINTED STEEL

COLOR:

WALLS – SPEC. NO. _____ ROOF _____ SPEC. NO. _____

DOORS – SPEC. NO. _____ TRIM _____ SPEC. NO. _____

TRANSLUCENT ROOF PANELS

☐ SIZE _____

☐ COLOR _____

☐ QTY. _____

3 ROOF SLOPE

☐ 2:12 ☐ 3:12 ■ 4:12

4 INSULATION – FIBREGLASS

■ WALLS ■ R–12 ☐ 3 LB/CU.FT. DENSITY SOUND ☐ R–20

■ ROOF ■ R–12 ☐ 3 LB/CU.FT. DENSITY SOUND ☐ R–20

5 DOORS – 20 GA. METAL, INSULATED (NORMAL SIZES)

– ☐ 3'x7' SINGLE ☐ WS ☐ WGW ☐ PH ☐ LS ☐ DC ☐ SF ☐ CC ☐ CP

2x ■ 6'x7' DOUBLE ■ WS ■ WGW ■ PH ■ LS ■ DC ■ SF ■ CC ■ CP ☐ WGWBD

WS – WEATHER STRIPPING LS – LOCKSET CC – CHECKCHAIN
WGW – WIRE GLAZED WINDOW DC – DOOR CLOSURE CP – CANOPY
PH – PANIC HARDWARE SF – STEEL FRAME
WGWBD – WIRE GLAZED WINDOW IN BOTH DOORS

6 WINDOWS–HORIZ. SLIDING c/w SCREEN (DOUBLE GLAZED)

■ QTY 3 40x40 ☐ QTY – 40x50 ☐ QTY – WIRE GLAZED

7 LINING

■ 24 GA. FLUTED ALUMINUM ☐ 22 GA. PERFORATED ALUMINUM

☐ 24 GA. FLUTED ALUMINUM – WHITE

8 ERECTION

☐ ON SITE BY BLDG. MANUFACTURER ■ AT FAB. SHOP BY BLDG. MANUFACTURER

9 WALL LOUVRES (NOMINAL SIZES)

☐ – STAMPED LOUVRE c/w SLIDE CLOSURE AND SCREEN

■ 2 – 18"X32" ADJUSTABLE LOUVRE c/w MANUAL CONTROL AND SCREEN

10 RIDGE VENTILATOR

■ RIDGE VENTILATOR c/w MANUAL CONTROLS & BIRDSCREEN, 9" THROAT

☐ ACCOUSTIC TYPE RIDGE VENTILATOR c/w MANUAL CONTROLS & BIRDSCREEN

■ LENGTH FULL

11 ROLL–UP DOORS/SECTIONAL O/H DOORS/SLIDING DOORS

☐ _____ STEEL ROLL–UP DOOR ☐ DIRECT DRIVE CHAIN HOIST

☐ _____ STEEL HINGED ACCESS DOOR ☐ GEARED CHAIN HOIST

☐ _____ STEEL BOLTED ACCESS DOOR ☐ MANUAL OPER. CHAIN HOIST

☐ INSULATED

12 FANS – ROOF/WALL

☐ ____ ROOF

■ 1 WALL

ELECTRIC DRIVEN FAN CAPABLE OF PROVIDING A MIN. OF 12 AIR CHANGES/HOUR AT 1/8" SP c/w BACK DRAFT DAMPERS. ALUM. HOUSING AND BIRDSCREEN. MOTOR TO BE CSA APPROVED. EXPLOSION PROOF (CLASS 1, GROUP D, DIVISION 1). EXTERNALLY MOUNTED.

■ 120/240 V – 1 PHASE ☐ PENN DOMEX

☐ 240/480 V – 3 PHASE ■ STD. PROPELLER

☐ SOUND ATTENUATOR

13 POLYETHYLENE VAPOUR BARRIER

☐ 2 MIL. ■ 4 MIL. ☐ 6 MIL.

14 EAVESTROUGH, DOWNSPOUT AND ICE RAKES

■ EAVESTROUGHS ■ DOWNSPOUTS ■ ICE RAKES

15 BUILDING SIZE

■ LENGTH 22'–0"

■ WIDTH 16'–0"

■ EAVE HEIGHT 12'–0"

ENERGY INDUSTRIES SCOPE OF SUPPLY

No.	PART No.	DESCRIPTION	QUANTITY
701	13A329	BEARING, PILLOW BLOCK, 1 7/16" NON EXPANDING, IMPERIAL STYLE, DODGE	2
702	NPN	BELT, JACKSHAFT, TYPE 5V, 2 GROOVE 2R5V800	1
703	NPN	BELT, COOLER, TYPE 5V, 2 GROOVE, PART # 2R5V1700	1
704	NPN	BELT, COMPRESSOR, TYPE B, 2 GROOVE, 2RB72	1
705	12C287	BUSHING, COOLER SHEAVE, TYPE 'F', 2 7/16"ø BORE, c/w 5/8" x 5/16" KWY	1
706	12A997	BUSHING, COOLER IDLER, TYPE 'SF', 2 3/16"ø BORE, c/w 1/2" x 1/4" KWY	1
707	NPN	BELT, HOLLEY GENERATOR, TYPE 5V, 1 GROOVE, 5V530	1
708	NPN	BUSHING, ENGINE	1
709	12C058	BUSHING, COMPRESSOR JACKSHAFT, SHEAVE, TYPE SK, 1 7/16"ø BORE, c/w 3/8" x 3/16" KWY	1
710	12A995	BUSHING, JACKSHAFT, SHEAVE, TYPE SF, 1 7/16"ø BORE, c/w 3/8" x 3/16" KWY	1
711	NPN	CONTROL PANEL, REMGUARD 'A', 24 VDC, CLASS I, DIV. II, GROUP C & D, TEMP CODE T2D (SEE STEP #151)	1
712	FSH–45–22–RB	COUPLING, COMPRESSOR, FSH SERIES 45, 22.5"ø OD x 21.375"ø B.C. ENGINE ADAPTOR PLATE, SAE BOLTING, c/w 3.25"ID ROUGH BORE HUB 2250 RPM RATED	1
713	88A838	CONNECTOR, BRAIDED, 0.75" NPT x 12" LG	1
714	88E243	HEATER, CATADINE, 48,000 BTU/H, 12 VDC (c/w ACCESSORIES)	3
715	NPN	JACKSHAFT, 1.4375"ø x 20" LG, c/w 0.375" x 0.1875" KWY x 4" LG BOTH ENDS	1
716	NPN	SHEAVE, COMPRESSOR JACKSHAFT, 7.0" OD, TYPE B, 3 GROOVE	1
717	30D046	SHEAVE, JACKSHAFT, 9.0", TYPE 5V, 3 GROOVE	1
718	30D038	SHEAVE, COOLER, 37.5" P.D., TYPE 5V, 3 GROOVE	1
719	30D010	SHEAVE, COOLER IDLER, 10.9" P.D., TYPE 5V, 3 GROOVE	1
720	NPN	3 FILTER PACKAGE c/w AIR DRYER	1
721	NPN	SHEAVE, ENGINE, 8.86" P.D., TYPE 5V, 4 GROOVE	1
722	NPN	DRYER, MEMBRANE, CACTUS, PC3030–D2–4A–20, MAX 300 PSIG, 1/2" NPT	1
723	–	–	–
724	VS2–E	SWITCH, VIBRATION, MURPHY, VS2–E	3
725	14–5354	WRENCH, PISTON NUT, A354 FRAME (c/w TOOLBOX c/w FRAME)	1
726	M204	PICKUP, MAGNETIC, DYNALCO, M204	1
727	NPN	COMPRESSOR, AIR, QUINCY V325LVD–NM, RATED 18.64 ACFM @ 175 PSIG, 200 PSIG MAX, CLASS 1, DIV. 2 c/w 80 US GALLON AIR RECEIVER, PRESSURE GAUGE, RELIEF VALVE, DISCHARGE VALVE AND MANUAL TANK DRAIN	1
728	M22CR–1.0	VALVE, BALL, MERIDIAN, M22CR–1.0, 1" FNPT, 2000#	1
729	–	–	–
730	–	–	–
		ELECTRICAL SCOPE OF SUPPLY	
731	NPN	BATTERY BOX, 24VDC, CLASS 1, DIV 2, #23–10–080–678/BB2 (c/w GAS DETECTION AND UNDERVOLTAGE RELAYS)	1
732	–	–	–
733	–	–	–
734	–	–	–
735	–	–	–
736	NPN	GENERATOR, HOLLEY, 24VDC, c/w MOUNTING BRACKET, CLASS 1, DIV 2	1
737	–	–	–
738	–	–	–
739	–	–	–
740	–	–	–
742	–	–	–
743	–	–	–

PROPRIETARY MATERIAL
NOT BE BE RE-PRODUCED OR DISTRIBUTED WITHOUT THE PRIOR WRITTEN CONSENT OF ENERGY INDUSTRIES INC.

NOTES;
1. FOR ALL OTHER NOTES & GENERAL INFORMATION SEE DWG. #PFLOW.
2. MANIFOLD BEARING GREASE LINES TO A SINGLE LOCATION.

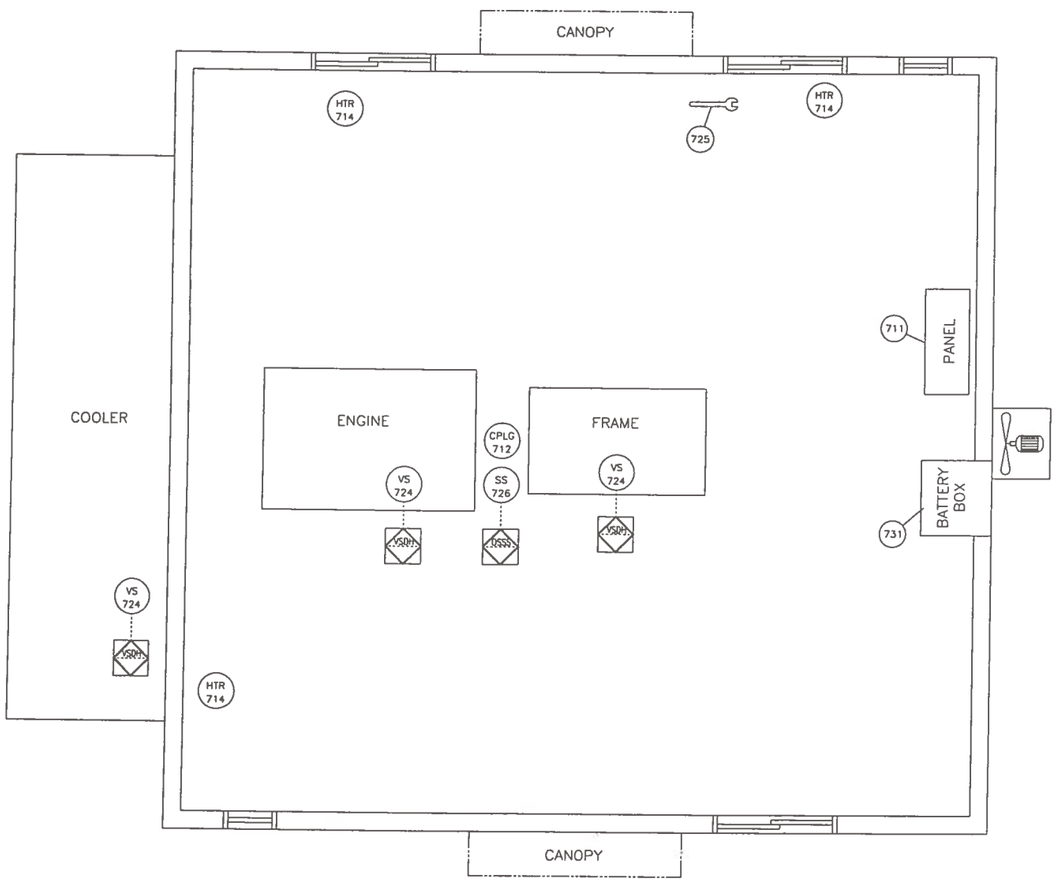

PLAN

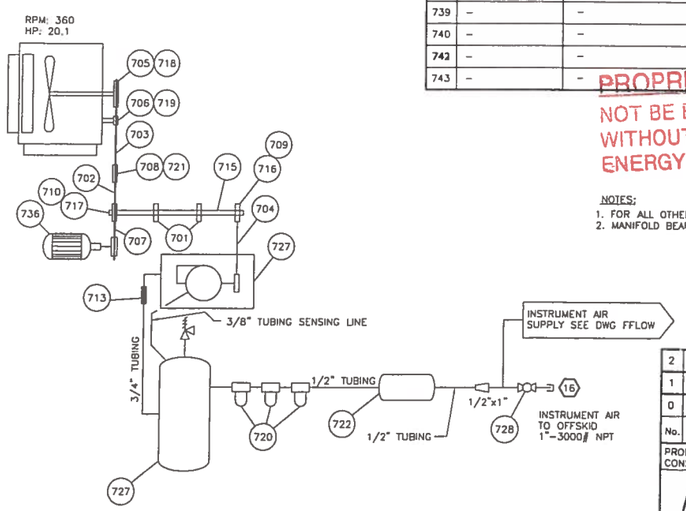

SHEAVES/BELTS & SHAFTS

No.	REVISION	DATE	BY
2	AS BUILT	02/12/04	VS
1	ISSUED FOR CONSTRUCTION	12/03/03	VS
0	ISSUED FOR APPROVAL	11/18/03	VS

PROPRIETARY MATERIAL: NOT TO BE REPRODUCED OR DISTRIBUTED WITHOUT THE PRIOR WRITTEN CONSENT OF ENERGY INDUSTRIES INC.

ENERGY INDUSTRIES INC. 4303 – 11TH STREET N.E. CALGARY ALBERTA CANADA

TITLE: EQUIPMENT LAYOUT

CUSTOMER: PROGRESS ENERGY LTD. CURRANT GAS COMPRESSOR LSD: b–9–C/94–A16

SCALE: NONE | DATE: 11/18/03 | BY: VS | DATE RELEASED: 2/23/04 | RELEASED BY: VS

W.O. # 570 | UNIT # 1103 | DRAWING NO.: 1103–EQUIPMENTLAYOUT | REV.2

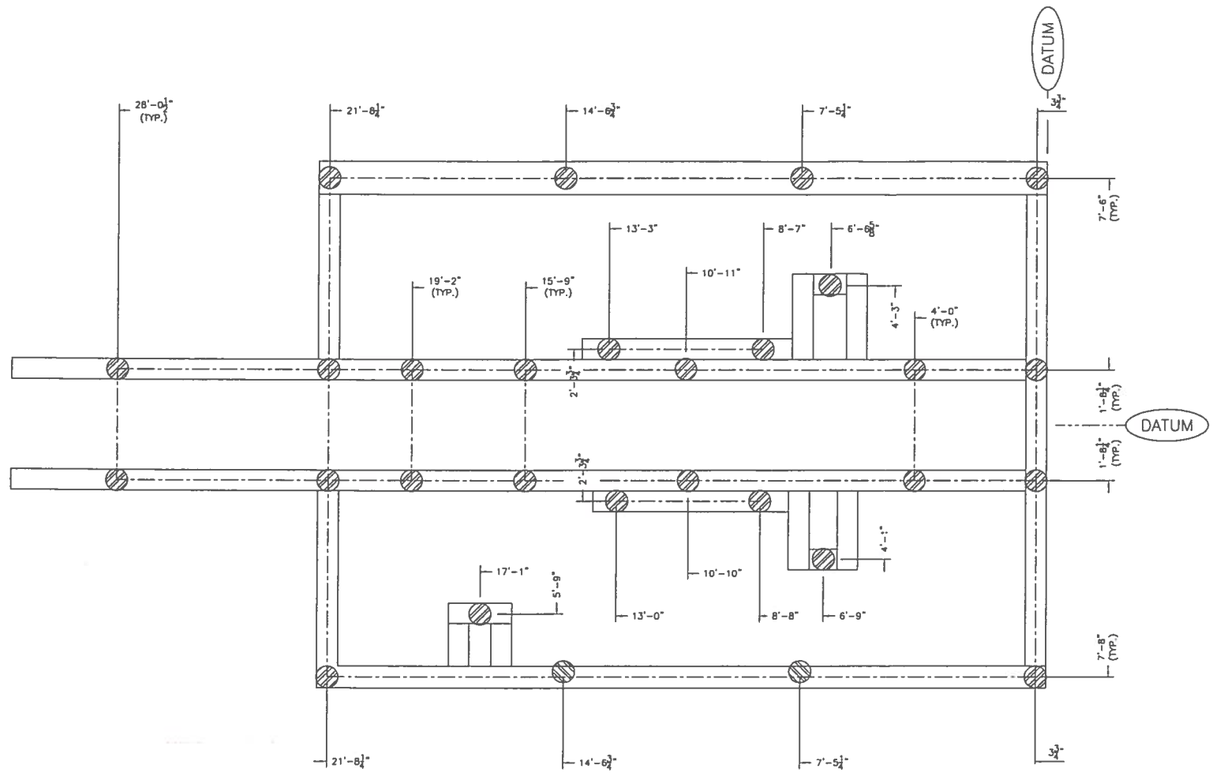

MAJOR COMPONENT WEIGHTS

Description	Weight (lbs.)
COMPRESSOR FRAME:	2650
ENGINE: (c/w FLUIDS)	7200
COOLER:	11,600
SUCTION SCRUBBER:	1292
INTERSTAGE #1 SCRUBBER	1203
INTERSTAGE #2 SCRUBBER	1357
THROW #1 CYLINDER & BOTTLES:	550
THROW #2 CYLINDER & BOTTLES:	1050
THROW #3 CYLINDER & BOTTLES:	2400
THROW #4 CYLINDER & BOTTLES:	1200
SKID BASE: (w/o CONCRETE)	16700
SKID BASE: (w/ CONCRETE)	29900
OTHER:	---
OTHER:	---
OTHER:	---
OTHER:	---
TOTAL PACKAGE:	82,500

⊘ - SUPPORT POINT (NOT NECESSARILY A PILE LOCATION)

PLEASE READ CAREFULLY

1. INSTALLATION OF THIS SKIDDED COMPRESSOR PACKAGE IS THE RESPONSIBILITY OF THE OWNER.

2. ALL PILE CAPS MUST BE SHIMMED AND WELDED TO THE SKID WITH CONTINUOUS WELDMENTS USING GOOD WELDING PRACTICES. STITCH WELDING IS NOT ACCEPTABLE. ENERGY INDUSTRIES INC. DOES NOT WARRANT VIBRATION ISSUES RELATING TO POOR PILE TO SKID CONNECTIONS, OR INSUFFICIENT PILE DESIGN.

3. PACKAGES INCORPORATING SEAL PANS (DRIP) IN THE WINGS WILL RESTRICT ACCESS TO SUPPORTS BELOW. IT MAY BE NECESSARY TO CUT THE SEAL PAN TO GAIN ACCESS TO THESE AREAS.

4. A RECIPROCATING COMPRESSOR IS CAPABLE OF PRODUCING VERY HIGH HORIZONTAL COUPLES ABOUT THE CENTERLINE OF THE CRANKCASE. CAREFUL CONSIDERATION MUST BE GIVEN TO THE LOCATION OF SUPPORT BELOW THE CYLINDER CROSSHEAD AREA OF THE SKID. A SINGLE POINT OF SUPPORT BELOW EACH THROW IS NOT SUFFICIENT.

5. THIS DRAWING INDICATES THE MINIMUM RECOMMENDED NUMBER OF SUPPORT POINTS. THE ACTUAL NUMBER AND LOCATION REQUIRED MAY BE MORE, DEPENDING ON SOIL CONDITIONS, DEPTH OF REFUSAL, ETC.. ENERGY INDUSTRIES INC. DOES NOT AND CANNOT WARRANT THIS SUGGESTED DESIGN AND IT IS STRONGLY RECOMMENDED THAT A CIVIL ENGINEER FAMILIAR WITH PACKAGED COMPRESSORS BE CONSULTED TO DESIGN THE FOUNDATION FOR THIS COMPRESSOR PACKAGE.

PROPRIETARY MATERIAL
NOT BE BE RE-PRODUCED OR DISTRIBUTED WITHOUT THE PRIOR WRITTEN CONSENT OF ENERGY INDUSTRIES INC.

COMPRESSOR UNBALANCED FORCES @ 1800 RPM

THROW #	1	2	3	4	5	6
CYLINDER BORE (IN.)	DUMMY	5.0	9.5	7.0	---	---

UNBALANCED SHAKING FORCES = NIL (ALL FRAMES)

Description	Tag	Ft. lbs.
PRIMARY VERTICAL COUPLE	CV1	1386
PRIMARY HORIZONTAL COUPLE	CH1	3670
SECONDARY VERTICAL COUPLE	CV2	0
SECONDARY HORIZONTAL COUPLE	CH2	200

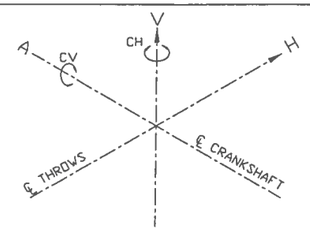

No.	REVISION	DATE	BY
0	ISSUED FOR REFERENCE	01/07/04	VS

ENERGY INDUSTRIES INC. 4303 - 11TH STREET N.E. CALGARY ALBERTA CANADA

TITLE: SUGGESTED SUPPORT LOCATION WAUKESHA H24GL/GEMINI A354-3 AIR-X-HEMPHILL 96AEF

CUSTOMER: PROGRESS ENERGY LTD. CURRANT GAS COMPRESSOR LSD: b-9-C/94-A-16

SCALE: 1/2"=1'-0" | DATE: 01/07/04 | BY: VS | DATE RELEASED: 1/13/04 | RELEASED BY: VS

STEP N/A | UNIT# 1103 | DRAWING NO: 1103-PILE | REV. 0