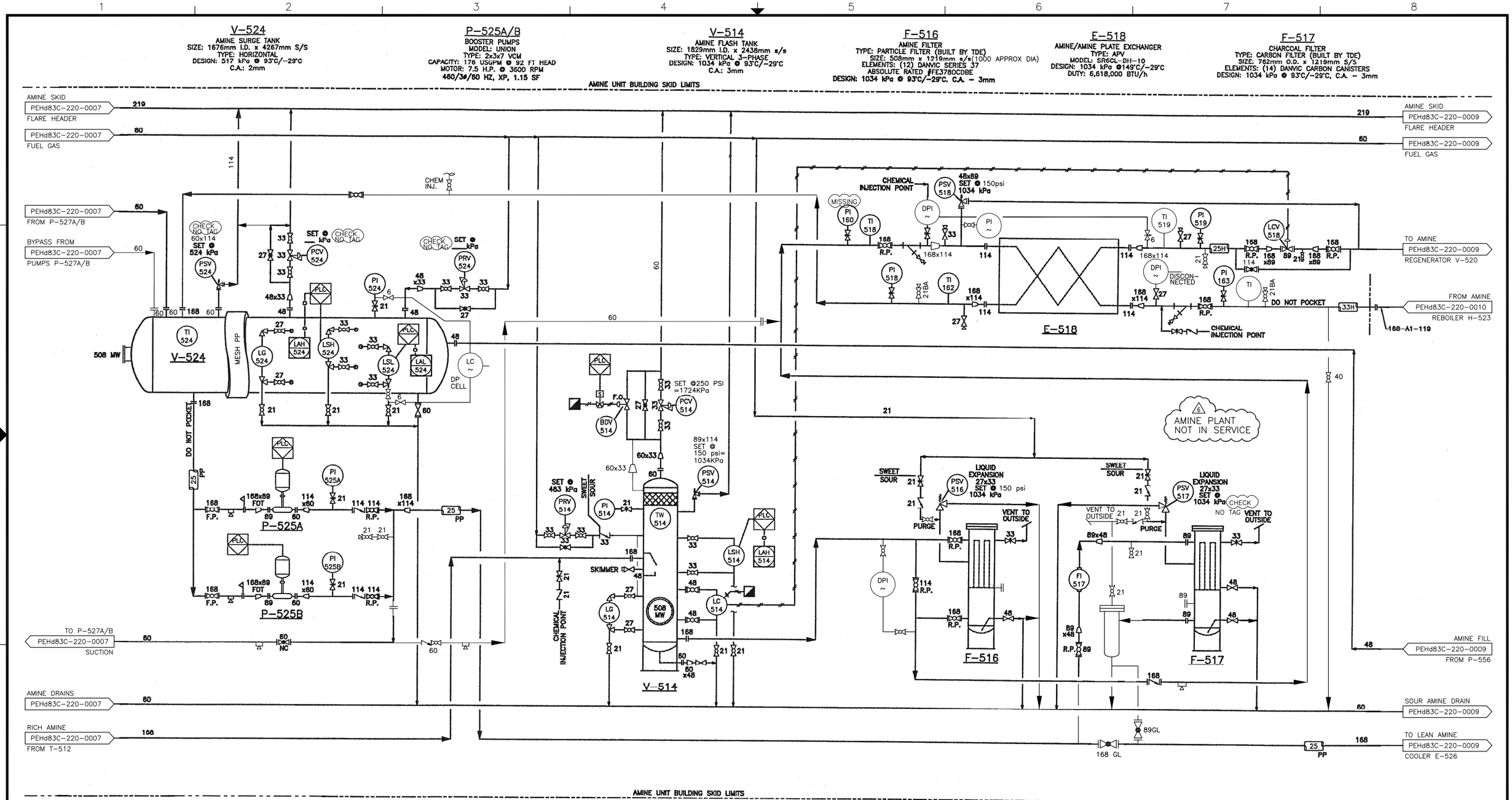

DRAWING NO.	REFERENCE DRAWINGS
00-876-3108/01	PREVIOUS DRAWING NUMBER

DRAWINGS PREPARED BY: CANADIAN NATURAL

REV.	DESCRIPTION	BY	DATE	CHK	APP.	CLIENT
6	IFC-MAY 04,2017 - FCR-STA-17-021 (TITLE BLOCK & DRAWING NUMBER UPDATE)	MF	2017-08-22	RS	RS	
5	ISSUED FOR FINAL RECORD PROJ. 1.220.10.003 (CH2M-409464)	AJB	2011-02-17		MA	
4	IFFR (1.220.10.003) 2366-409464	IGP	2010-10-01		MA	
3	AS BUILT	GX	2001-11-12			
2	ISSUED FOR 2001 MODIFICATION	A.L.	2001-07-10			
1	ISSUED FOR CONSTRUCTION	S.W.	2001-01-15	W.B.		

DRAWN BY: CJB	DATE 2000-06-29
DESIGNED BY:	DATE
CHECKED BY:	DATE
APPROVED BY:	DATE
CLIENT BY:	DATE

Canadian Natural

TITLE
PEGGO HELMET (3150)
LSD: d-83-C 94-P-8
AMINE GAS PLANT
PIPING & INSTRUMENTATION DIAGRAM

SCALE	JOB NO.	DRAWING NO.	REV.
N.T.S.	-	PEHd83C-220-0008	6