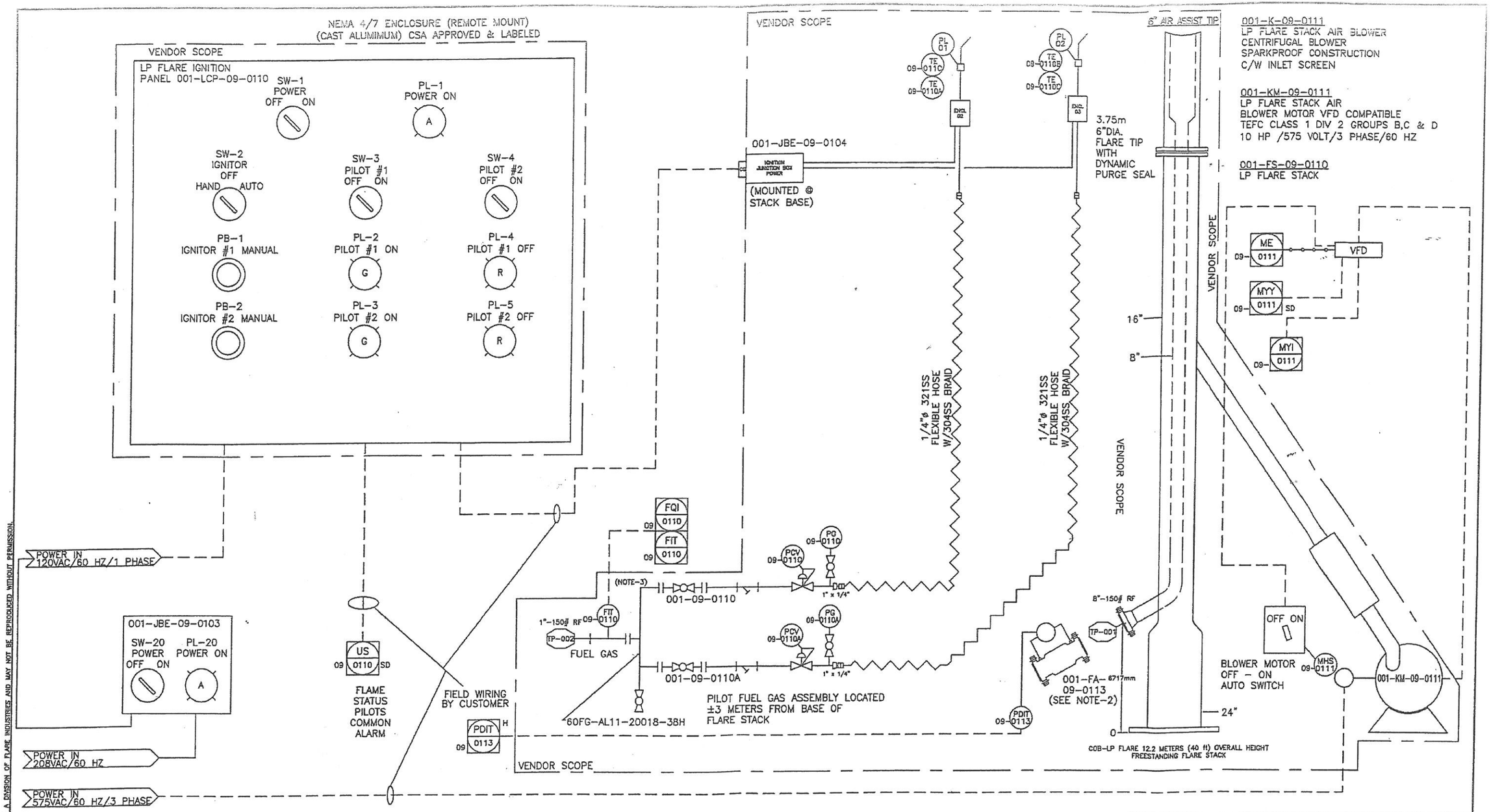

TP-001	8"-150#	FLARE STACK INLET
TP-002	1"-150#	PILOT 1 FUEL INLET

PROFESSIONAL ENGINEER THOMAS A. TURTON ALBERTA
FEB 19 2014

NOTES:

1) ALL INSTRUMENTS TAGS SHALL BE READ AS FULL TAG NUMBERS EG:001-PCV-01-0110
2) FLAME ARRESTOR 001-FA-09-0113 DIFFERENTIAL INDICATOR 001-PDIT-09-0113
3) THERMAL MASS FLOW METER

LEGENDS
—— BY OTHERS
— — CABLE

REVISION BLOCK

REV	DATE	DESCRIPTION	BY
0	26-JUN-13	APPROVAL	SS
1	21-AUG-13	FABRICATION	SS
2	11-SEP-13	FABRICATION	SS
3	24-OCT-13	FABRICATION	SS
4	16-NOV-13	AS-BUILT	CCW

MACTRONIC
A DIVISION OF FLARE INDUSTRIES

CLIENT:	DEVON		
LOCATION	11-02-39-08 W5	P.O.:	4100001351
PROJECT	FERRIER	TAG.	001-FS-09-0110
TITLE:	PIPING, INSTRUMENTATION DIAGRAM FOR COB-LP FLARE		
DRAWN BY: SS	CHECKED BY:	DATE:	08-JULY-13
APP. BY:	PROJECT BY:	SCALE:	N.T.S
JOB ORDER:	13-0138	DRAWING NUMBER:	13-0138-COB-LP-PID REV. 4

THIS DRAWING IS THE EXCLUSIVE PROPERTY OF MACTRONIC A DIVISION OF FLARE INDUSTRIES AND MAY NOT BE REPRODUCED WITHOUT PERMISSION.