does not Fit

25 mm

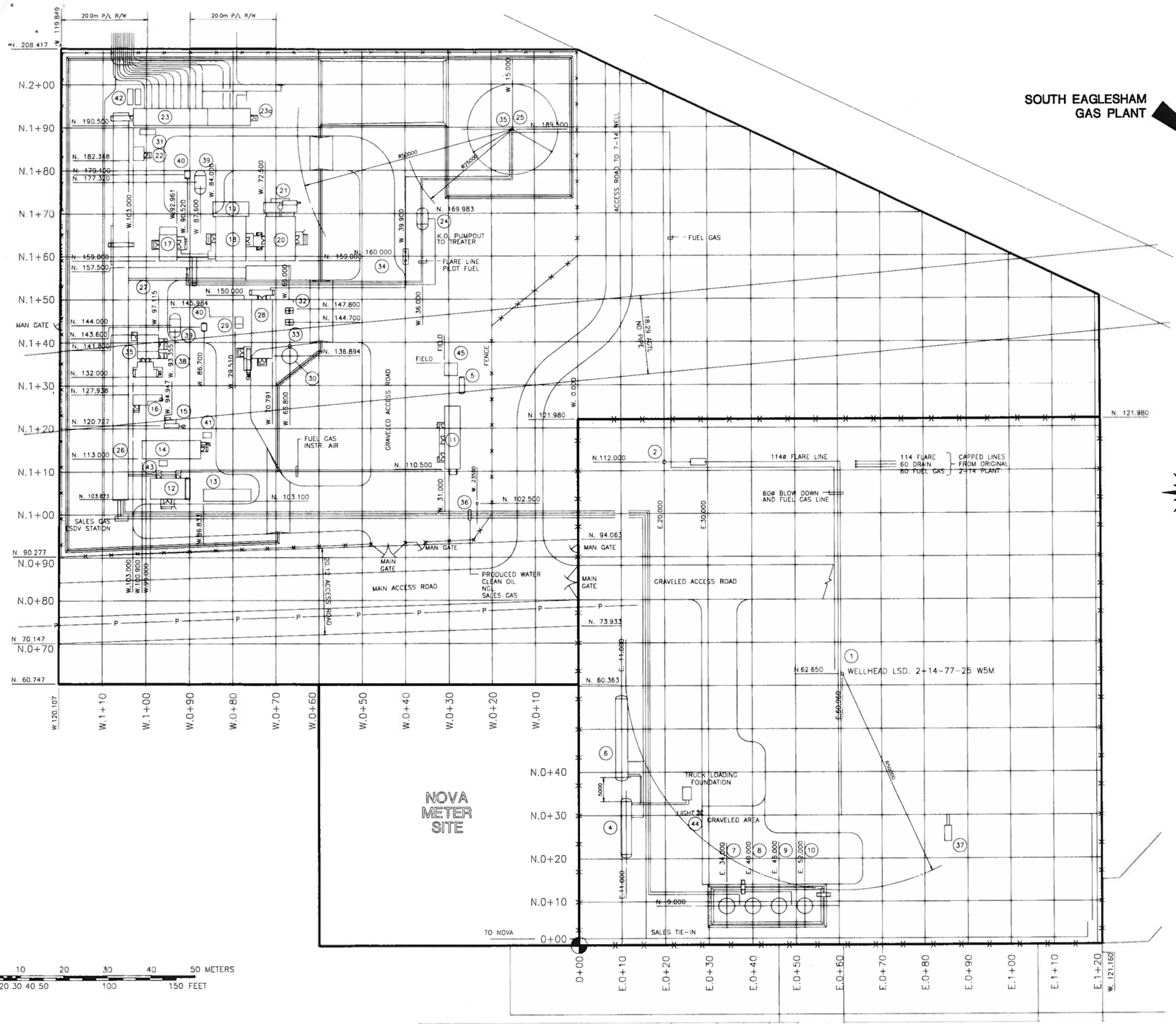

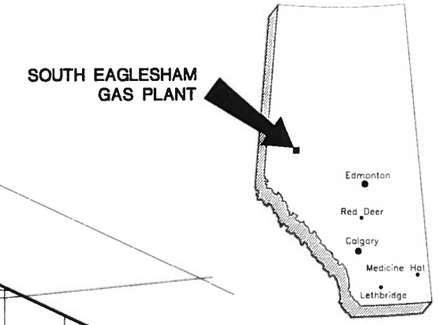

BUILDING/EQUIPMENT SCHEDULE

NO	DESCRIPTION	TAG NO.	SIZE	REMARKS
1	WELLHEAD	–	–	–
2	FLARE STACK	FS-900	168ø x 12192 HI.	REINSTALL
3	BLOWDOWN DRUM	V-180	–	–
4	LPG STORAGE TANK	V-810	90m3	–
5	SEWAGE RUNDOWN TANK	S-940	1254ø x 3970 S/S	–
6	LPG STORAGE TANK	V-820	2745ø x 18290 T/T	30,000 GALS. US
7	OIL STORAGE TANK	S-910	3660ø x 6100 HI.	400 bbl. API.
8	OIL STORAGE TANK	S-900	3660ø x 6100 HI.	400 bbl. API.
9	WATER STORAGE TANK	S-930	3660ø x 6100 HI.	400 bbl. API.
10	WATER STORAGE TANK	S-920	3660ø x 6100 HI.	400 bbl. API.
11	OFFICE/MCC BUILDING	–	3650 x 14630 LG.	–
12	REFRIG. COMPRESSOR BLDG.	–	4877 x 9144 LG.	–
13	CONDENSER	–	5000 x 4000 LG.	–
14	D.P.C.U. BLDG.	–	4267 x 13412 LG.	–
15	PROCESS HEATER	H-455	9140 x 3148 LG.	–
16	UTILITY HEATER BLDG	–	2440 x 6700 LG.	–
17	RECYCLE COMPRESSOR BLDG	–	4115 x 7925 LG.	–
18	COMPRESSOR BLDG.	–	7010 x 10363 LG.	
19	COOLER-X	–	8449 x 3416 LG	
20	COMPRESSOR BLDG.	–	7010 x 10363 LG.	–
21	COOLER-X	–	7328 x 3363 LG.	–
22	L.P. FLASH SEPARATOR BLDG.	–	2286 x 3048 LG.	–
23	INLET SEPARATOR BLDG.	–	3962 x 16227 LG.	–
23a	INLET SEPARATOR MODULE #2	–	3962 x 10000 LG.	–
24	FLARE K.O. DRUM	S-940	2590ø x 5084 LG	UNDERGROUND
25	PROCESS/ACID GAS FLARE STK.	FS-960	273ø x 21340 H	GUIDE-WIRE PILE RADIUS = 34' 6"
26	PIPE RACK	–	3000 x 84000 LG.	–
27	PIPE RACK	–	2000 x 9500 LG.	–
28	AMINE SWEETENING FACILITY	–	4877 x 13716 LG.	NEW
29	AMINE CONDENSER/COOLER	E-206-1/2	1842 x 2438 LG.	NEW
30	WATER MAKE-UP TANK	S-830	3658ø x 3048 HI.	NEW
31	CHEMICAL STORAGE TANK	–	–	–
32	AMINE DRAIN TANK	S-850	1270ø x 1830 LG.	NEW
33	FLOOR DRAIN TANK	S-840	1270ø x 1830 LG.	NEW
34	ACID GAS FLARE K.O. DRUM	S-941	1245ø x 3124 T/T	NEW
35	TREAT OIL GAS COMPRESSOR	–	5485 x 4880	NEW
36	TRANSFORMER POLE	–		–
37	LINE HEATER	H-410	–	(TO BE RE COMMISSIONED)
38	TREATER SKID	–	2286 x 6096 LG.	–
39	PROCESS DRAIN TANK	S 970/975	2590ø x 5590	5000 GAL
40	FLOOR DRAIN TANK	S-980/985	1254ø x 2005	500 GAL
41	GLYCOL STILL DRAIN TANK	S-990	1254ø x 2250	2500 LITRE
42	METHANOL STORAGE TANK	S 160		–
43	METHANOL STORAGE TANK	S-400	–	
44	LIGHT POLE	–	–	–
45	AMINE MCC BUILDING	–		NEW

DWG. NO.

REFERENCE DRAWINGS

REV	REVISIONS	DATE	BY	CHK'D	APP'D	OWNR APP'D
5	ISSUED FOR CONSTRUCTION	98/07/08	SK			
4	T.O.G. COMPRESSOR / AMINE ADDITION	98/06/15	JSE	BRP		
3	COMPRESSOR # 2 ADDITION	97/06/17	BRP	KK		
2	AS-BUILT	95/11/04	BRP			
1	PHASE III – ISSUED FOR CONSTRUCTION	95/09/08	DB			
0	PHASE – ISSUED FOR B.I.	95/08/24	DB			

ENGINEER AND PERMIT STAMPS

DESIGNED		
DRAWN	GAS LIQUIDS ENG.	94-02-17
CHECKED	KK	97-06-17
PROCESS CK		
MECH CK.		
STRUCT. CK.		
ELECT CK		
OWNER APP		
OWNER APP		

AXP

ANDERSON EXPLORATION
CALGARY, ALBERTA, CANADA

SOUTH EAGLESHAM

GAS PLANT
PLOT PLAN
LSD. 2 14 77-25 W5M

JOB NO.	SCALE	DWG NO	
98 5374	1:500	0-2002 2	5

GAS LIQUIDS ENGINEERING LTD.
- GAS PURIFICATION
- REFRIGERATION
- CRYOGENICS
- DISTILLATION
- FACILITIES ENGINEERING

PLOTTED MAY 17 1999 10:20 AM

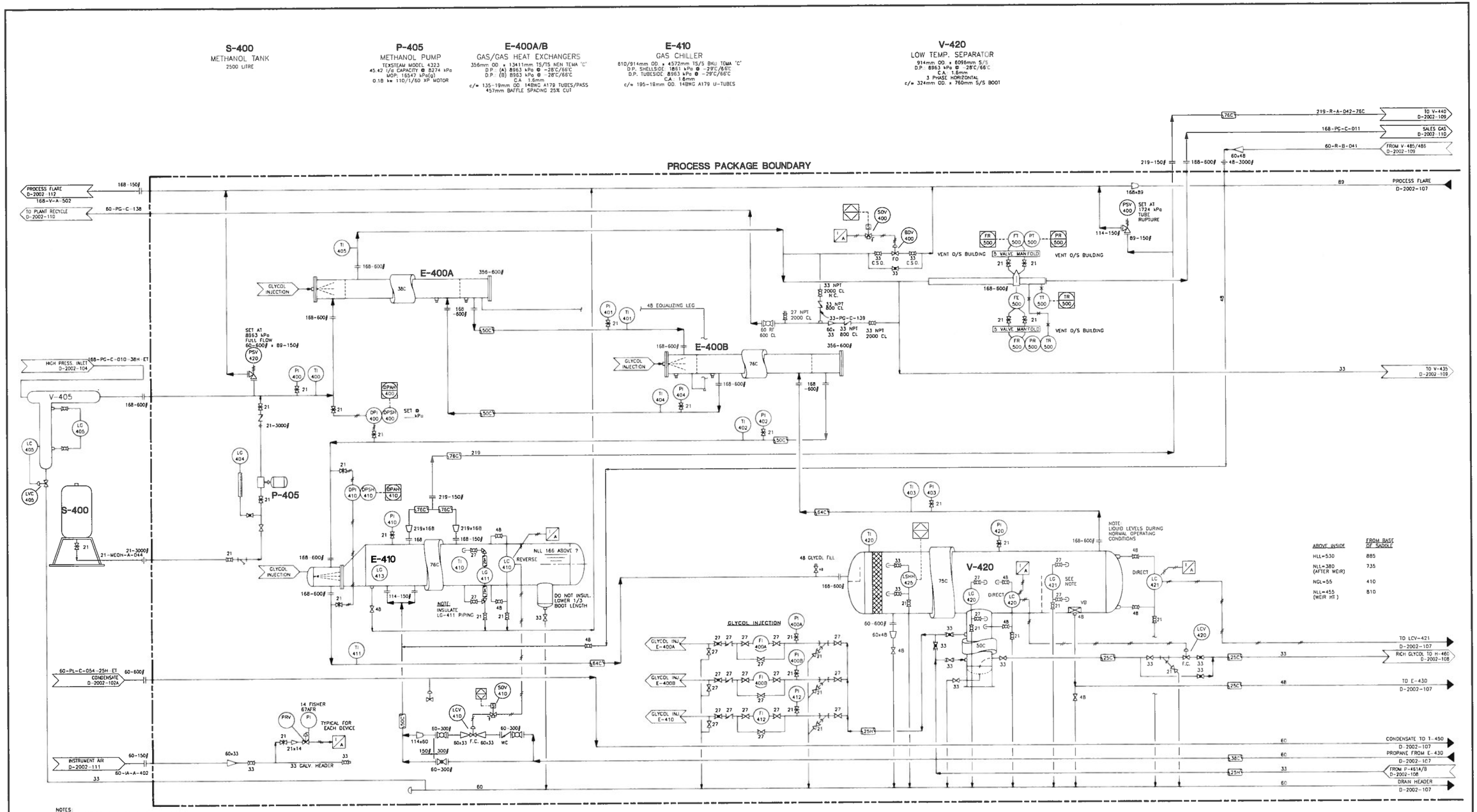

ABOVE INSIDE	FROM BASE OF SADDLE
HLL=530	885
NLL=380 (AFTER WEIR)	735
NGL=55	410
NLL=455 (WEIR HT)	810

NOTES:
1. REV. 6 WAS DRAWN BY GAS LIQUIDS ENGINEERING.

DWG. NO.	REFERENCE DRAWINGS	DEVON PROJECT	REV	REVISIONS	DATE (yy.mm.dd)	BY	CHK'D	APP'D	OWNR APP'D
			5	ISSUED FOR INFORMATION	98.07.08	SK			
			4	T.O.G. COMPRESSOR / AMINE ADDITION	98.07.02	MB			
		0811285	9	AS-BUILT (OEL# 6673) (NOTE A)	09.03.31	KW			
		0811285	8	ISSUED FOR CONSTRUCTION (OEL# 6673)	08.10.07	AK			
		0811285	7	ISSUED FOR APPROVAL (OEL# 6673)	08.10.02	AK	RW	JAT	
			6	ADD V-405	99.05.31	AJP			

O'ROURKE ENGINEERING LTD.

NOTE A:
AS-BUILT (REV. 9) PER FIELD QUALITY CONTROL MARK-UPS & PHOTOS. PROCESS SHOULD BE VERIFIED IN FIELD.

ENGINEER AND PERMIT STAMPS

ORIGINAL ALBERTA PROFESSIONAL ENGINEERING STAMP SIGNED ON OCT 07, 2008 BY BRIAN KIELLY, P.ENG.

ORIGINAL PERMIT TO PRACTICE STAMP LICENCE # P 0751 WAS SIGNED ON OCT 07, 2008 BY BRIAN KIELLY, P.ENG.

CADD FILE: D-2002-106

DESIGNED	
DRAWN	
CHECKED	
PROCESS CK	
MECH. CK.	
STRUCT. CK	
ELECT. CK	
OWNER APP	
OWNER APP	

devon

SOUTH EAGLESHAM
GAS PLANT PIPING MODIFICATIONS
P&ID - DEWPOINT CONTROL UNIT (Sheet 1 of 4)
LSD 02-14-77-25 W5M

CONTR JOB NO	SCALE	DWG. NO.	DEVON PROJ.	
6673	NONE	D-2002-106	0811285	9

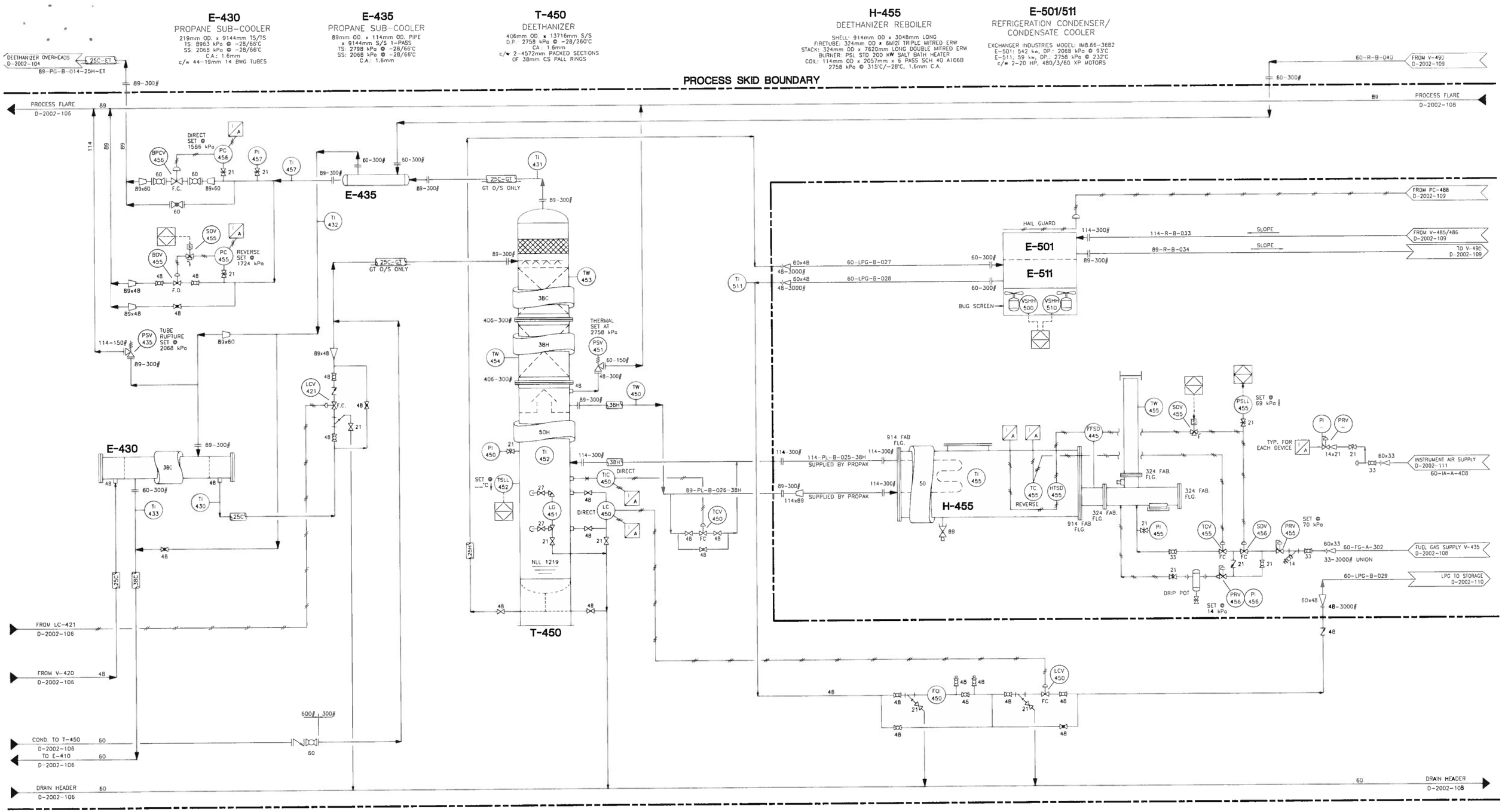

DWG. NO.	REFERENCE DRAWINGS
	JOB No.: 93197

PLOTTED: MAY 17, 1999 10:17 AM

REV	REVISIONS	DATE	BY	CHK'D	APP'D	AXL APP'D
5	ISSUED FOR INFORMATION	98/07/08	SK			
4	T.O.G. COMPRESSOR / AMINE ADDITION	98/07/02	SK			
3	COMPRESSOR # 2 ADDITION	97/06/17	BRP			
2	AS-BUILT	95/11/04	BRP			
1	PHASE III - ISSUED FOR CONSTRUCTION	95/09/08	DB			
0	PHASE III - ISSUED FOR B.D.	95/08/24	RHD			

ENGINEER AND PERMIT STAMPS

DESIGNED		
DRAWN	GAS LIQUIDS ENG.	94-01-30
CHECKED		
PROCESS CK.		
MECH. CK.		
STRUCT. CK.		
ELECT. CK.		
AXL APP.		
AXL APP.		

GAS LIQUIDS ENGINEERING LTD.
• GAS PURIFICATION • REFRIGERATION • CRYOGENICS • DISTILLATION • FACILITIES ENGINEERING

AXL ANDERSON EXPLORATION LTD.
CALGARY, ALBERTA, CANADA

PROJECT
SOUTH EAGLESHAM GAS PLANT

PIPING & INSTRUMENTATION DIAGRAM
LSD. 2-14-77-25 W5M.
DEWPOINT CONTROL UNIT (Sheet 2 of 4)

JOB NO.	SCALE	DWG. NO.	
2002	NONE	D-2002-107	5

V-437
FUEL GAS SCRUBBER
324mm OD x 1524mm S/S
DESIGN: 1724 kPa @ 66°C
CA: 1.6mm

V-470
GLYCOL FLASH SEPARATOR
324mm OD. x 1829mm S/S
DESIGN: 2286 kPa @ 66°C
VERTICAL 2-PHASE
CA: 1.6mm

P-461 A/B
GLYCOL INJECTION PUMPS
MODEL: UNION 5x3
CAP: 1.5 USGPM @ 8963 psig
MOTOR: 2 HP, 460/3/60 XP

F-460
GLYCOL FILTER
324mm OD x 1219mm S/S
DESIGN: 1034 kPa @ -28/93°C
CA: 1.6mm
c/w 4-PECO FT 336 ELEMENTS

F-461
CHARCOAL FILTER
324mm OD x 725mm S/S
DESIGN: 1034 kPa @ -28/93°C
CA: 1.6mm
c/w ONE PECO 1120 ELEMENT
ACTIVATED CARBON CANNISTERS

H-460
GLYCOL REGENERATOR
PSL STD 100 kW UNIT
REGEN. SHELL: 610mm OD x 3010mm LG
SURGE SHELL: 610mm OD x 2400mm LG
FIRETUBE: 219mm OD x 4000mm LG DOUBLE MITRE
STACK: 219mm OD. x 6096mm LG. DOUBLE MITRE
STILL: 219mm OD. x 2100mm LG.

H-401/402
BUILDING HEATERS
RUFFNECK GLYCOL MODEL HP5-20
120 VAC / XP FAN
c/w THERMOSTATS

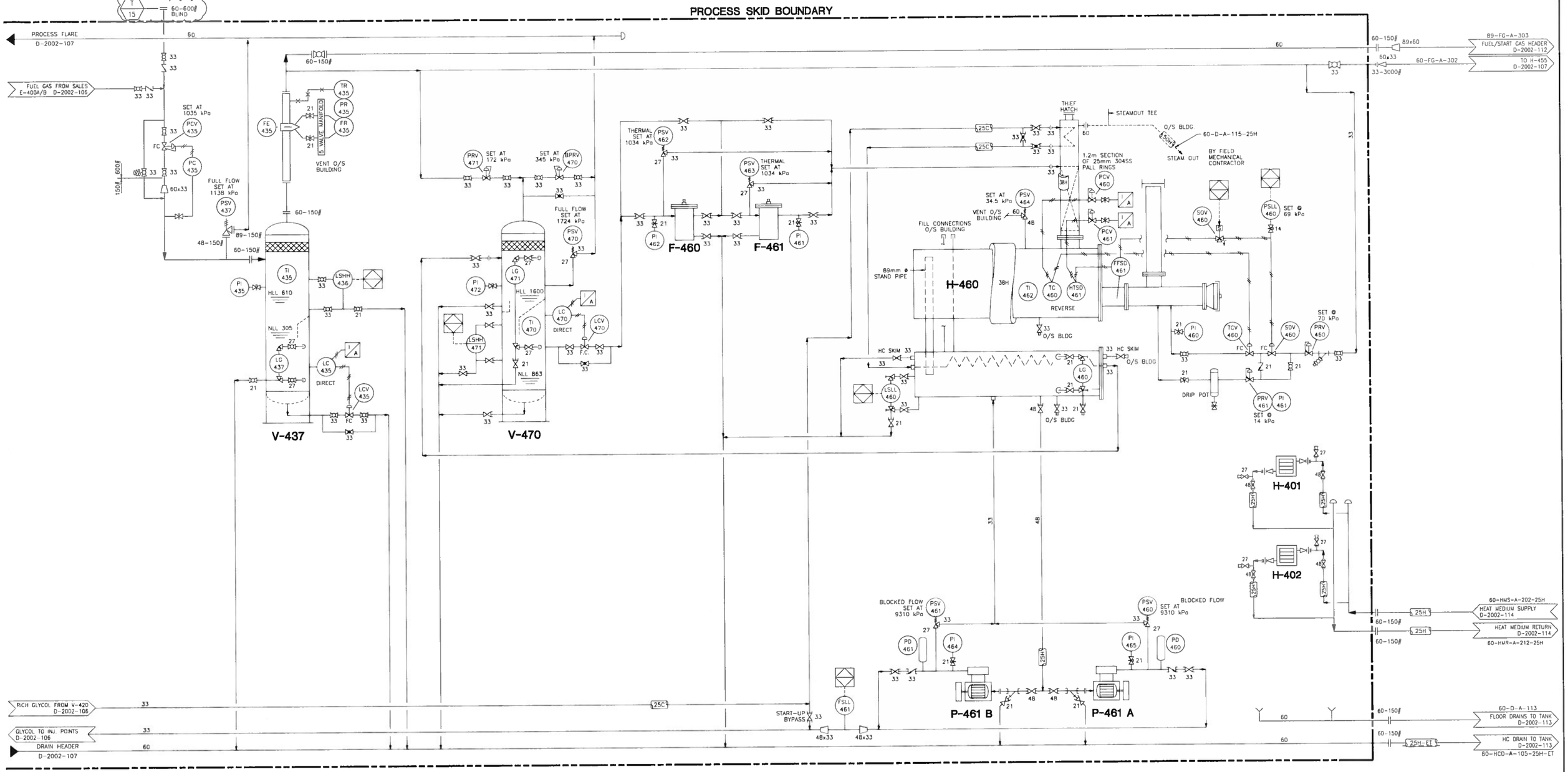

DWG. NO.	REFERENCE DRAWINGS	DEVON WBS NO.	REV	REVISIONS	DATE (yy.mm.dd)	BY	CHK'D	APP'D	OWNR APP'D	EPC
			2	ISSUED FOR INFORMATION	98-07-08	SK				
			1	AS-BUILT	94-10-12	CAE				
			F	ISSUED FOR CONSTRUCTION	94-07-04	RWG				
			E	ISSUED FOR BID	94-06-14	RWG				
		01-04584	4	ISSUED FOR CONSTRUCTION (GLE #13180)	13.12.12	RDC				GLE
		01-04584	3	ISSUED FOR REVIEW (GLE #13180)	13.10.18	RDC				GLE

ENGINEER AND PERMIT STAMPS

DRAWN BY	
PROCESS CK.	
INST. CK.	
CONTROLS CK.	
MECH. CK.	
CIVIL CK.	
STRUCT. CK.	
ELECT. CK.	
OWNER APP.	

CONSULTANT:
GAS LIQUIDS ENGINEERING

devon

SOUTH EAGLESHAM GAS PLANT
PIPING & INSTRUMENTATION DIAGRAM
LSD. 2-14-77-25 W5M.
DEWPOINT CONTROL UNIT (Sheet 3 of 4)

CONTR JOB NO	SCALE	DWG. NO.	DEVON WBS NO.
93197	NONE	D-2002-108	01-04584 4