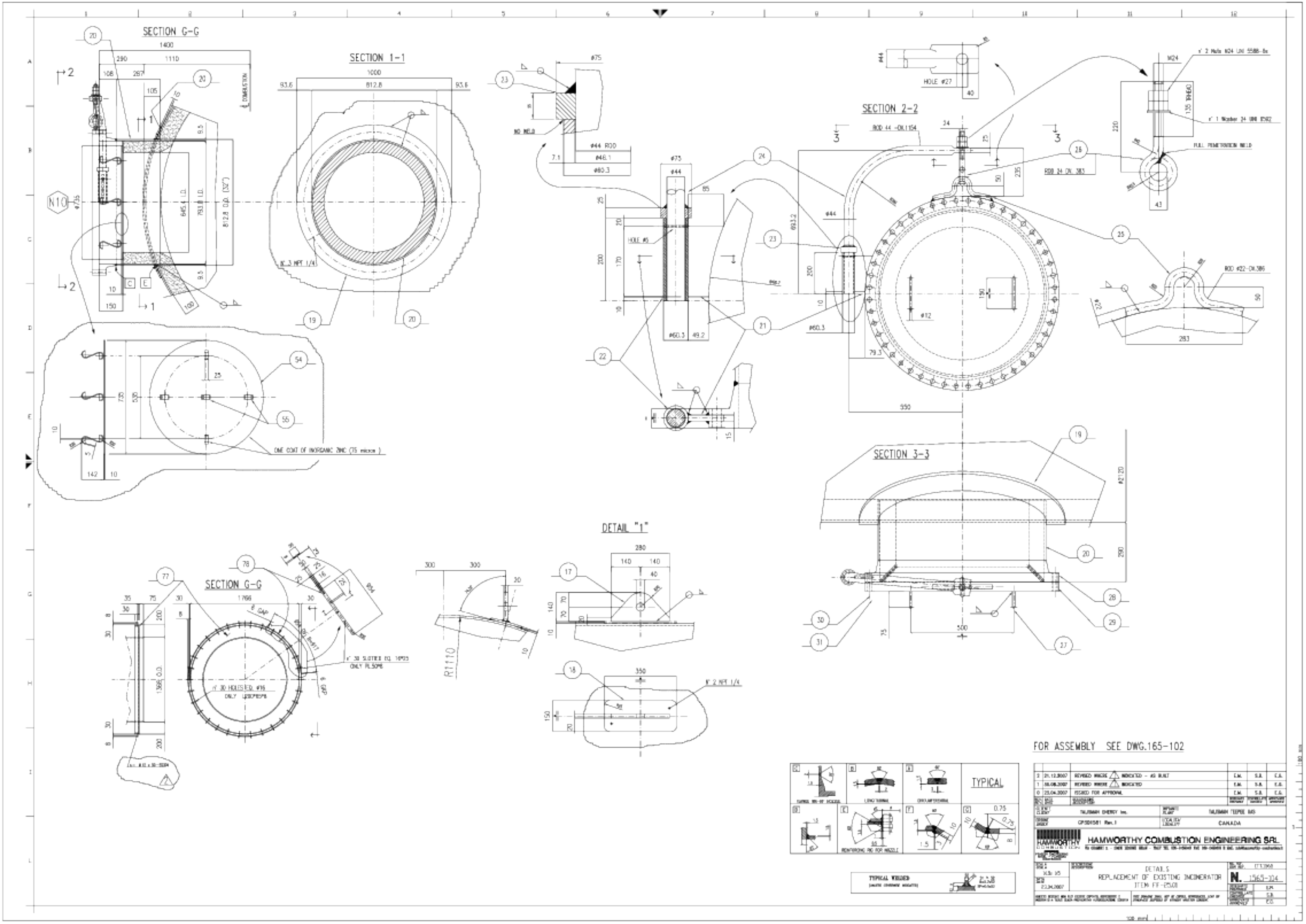
SECTION G-G
SECTION 1-1
SECTION 2-2
SECTION 3-3
DETAIL "1"
SECTION G-G
FOR ASSEMBLY SEE DWG.165-102
TYPICAL
TYPICAL WELDED
TALISMAN ENERGY Inc.
TALISMAN TEPEE BAS
CANADA
HAMWORTHY COMBUSTION ENGINEERING SRL
DETAILS
REPLACEMENT OF EXISTING INCINERATOR
ITEM FF-25.01
N. 1565-104
SCALA DI PLOTTAGGIO 1:15